Part III. Magnetics

12. Basic Magnetics Theory
13. Filter Inductor Design
14. Transformer Design

Chapter 12. Basic Magnetics Theory

12.1. Review of basic magnetics

- 12.1.1. Basic relations
- 12.1.2. Magnetic circuits

12.2. Transformer modeling

- 12.2.1. The ideal transformer
- 12.2.2. The magnetizing inductance
- 12.2.3. Leakage inductances

12.3. Loss mechanisms in magnetic devices

- 12.3.1. Core loss
- 12.3.2. Low-frequency copper loss

12.4. Eddy currents in winding conductors

- 12.4.1. The skin effect
- 12.4.2. The proximity effect
- 12.4.3. MMF diagrams
- 12.4.4. Power loss in a layer
- 12.4.5. Example: power loss in a transformer winding
- 12.4.6. PWM waveform harmonics

12.1. Review of basic magnetics
12.1.1. Basic relations

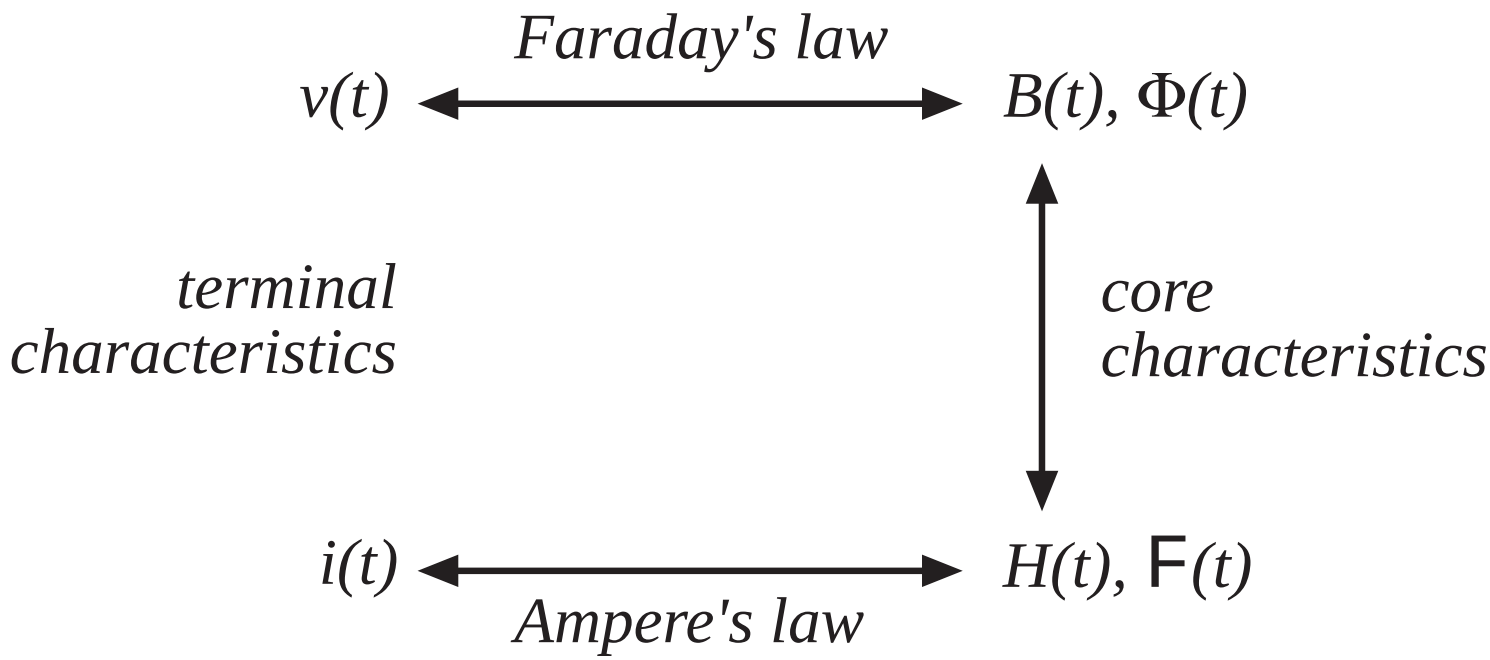

Basic quantities

Magnetic quantities

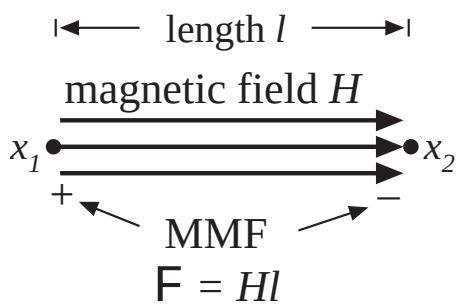

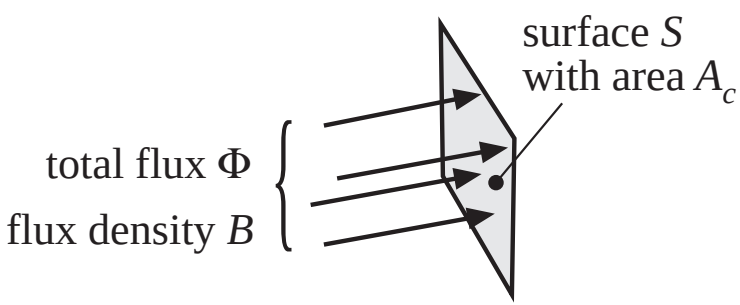

Electrical quantities

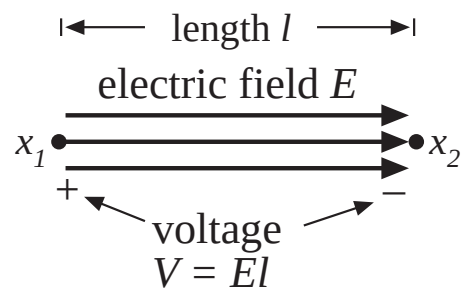

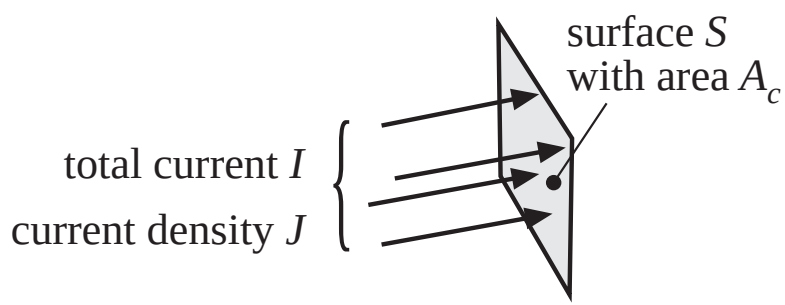

Magnetic field $\boldsymbol{H}$ and magnetomotive force $\mathcal{F}$

Magnetomotive force (MMF) $\mathcal{F}$ between points x_1 and x_2 is related to the magnetic field $\boldsymbol{H}$ according to

$$\mathcal{F} = \int_{x_1}^{x_2} \boldsymbol{H} \cdot \boldsymbol{dl}$$

Example: uniform magnetic field of magnitude H

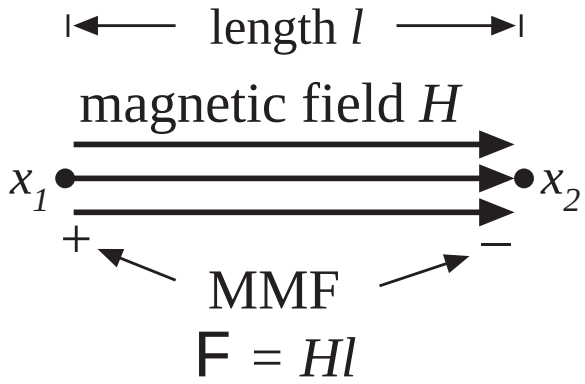

Analogous to electric field of strength E, which induces voltage (EMF) V:

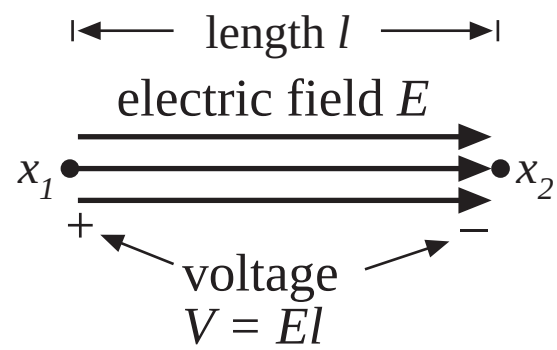

Flux density $\boldsymbol{B}$ and total flux Φ

The total magnetic flux Φ passing through a surface of area A_c is related to the flux density $\boldsymbol{B}$ according to

$$\Phi = \int_{\text{surface } S} \boldsymbol{B} \cdot d\boldsymbol{A}$$

Example: uniform flux density of magnitude B

$$\Phi = B\,A_c$$

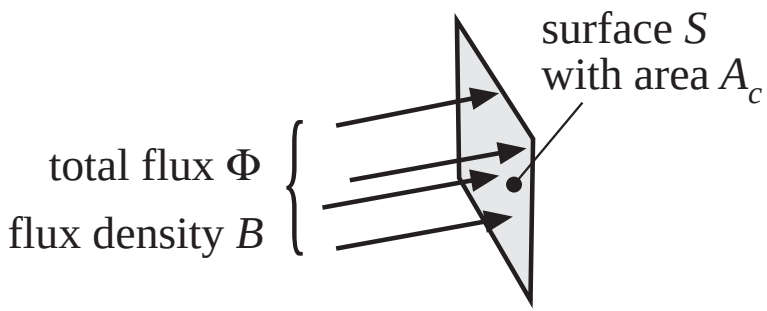

Analogous to electrical conductor current density of magnitude J, which leads to total conductor current I:

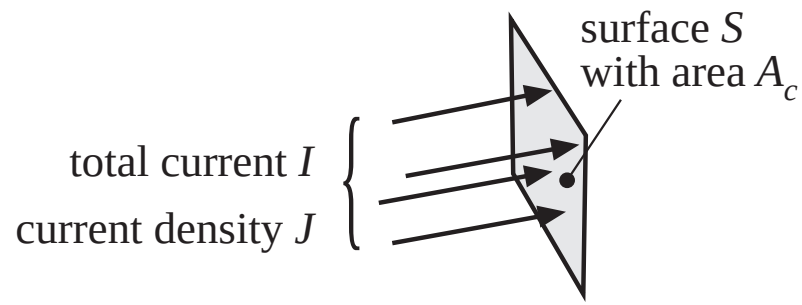

Faraday's law

Voltage $v(t)$ is induced in a loop of wire by change in the total flux $\Phi(t)$ passing through the interior of the loop, according to

$$v(t) = \frac{d\Phi(t)}{dt}$$

For uniform flux distribution, $\Phi(t) = B(t)A_c$ and hence

$$v(t) = A_c \frac{dB(t)}{dt}$$

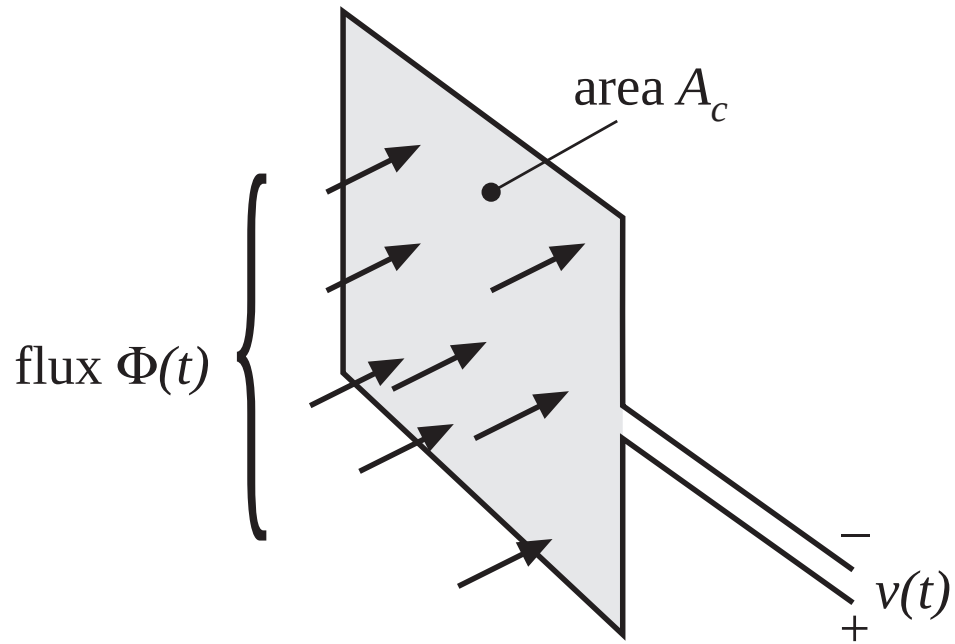

Lenz's law

The voltage $v(t)$ induced by the changing flux $\Phi(t)$ is of the polarity that tends to drive a current through the loop to counteract the flux change.

Example: a shorted loop of wire

- Changing flux Φ(t) induces a voltage v(t) around the loop
- This voltage, divided by the impedance of the loop conductor, leads to current i(t)
- This current induces a flux Φ'(t), which tends to oppose changes in Φ(t)

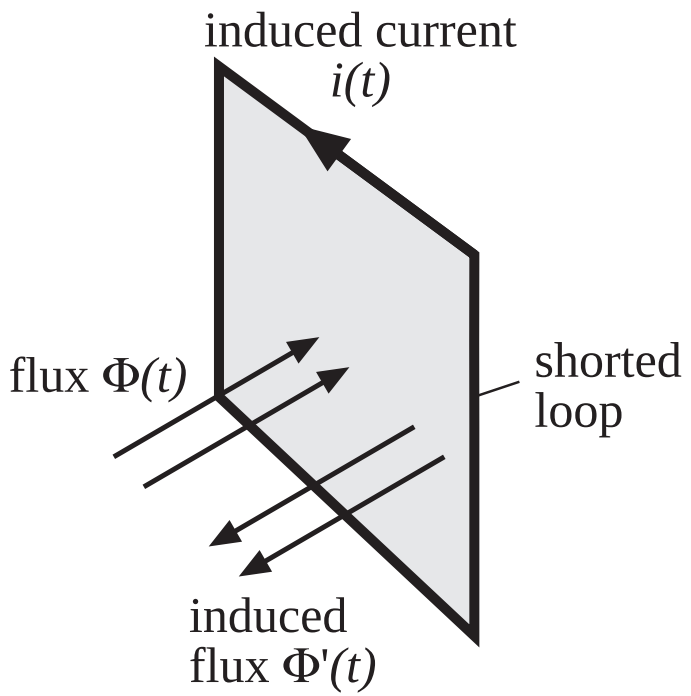

Ampere's law

The net MMF around a closed path is equal to the total current passing through the interior of the path:

$$\oint_{\text{closed path}} \boldsymbol{H} \cdot \boldsymbol{dl} = \textit{total current passing through interior of path}$$

Example: magnetic core. Wire carrying current $i(t)$ passes through core window.

- Illustrated path follows magnetic flux lines around interior of core
- For uniform magnetic field strength $H(t)$, the integral (MMF) is $H(t)l_m$. So

$$F(t) = H(t)\, l_m = i(t)$$

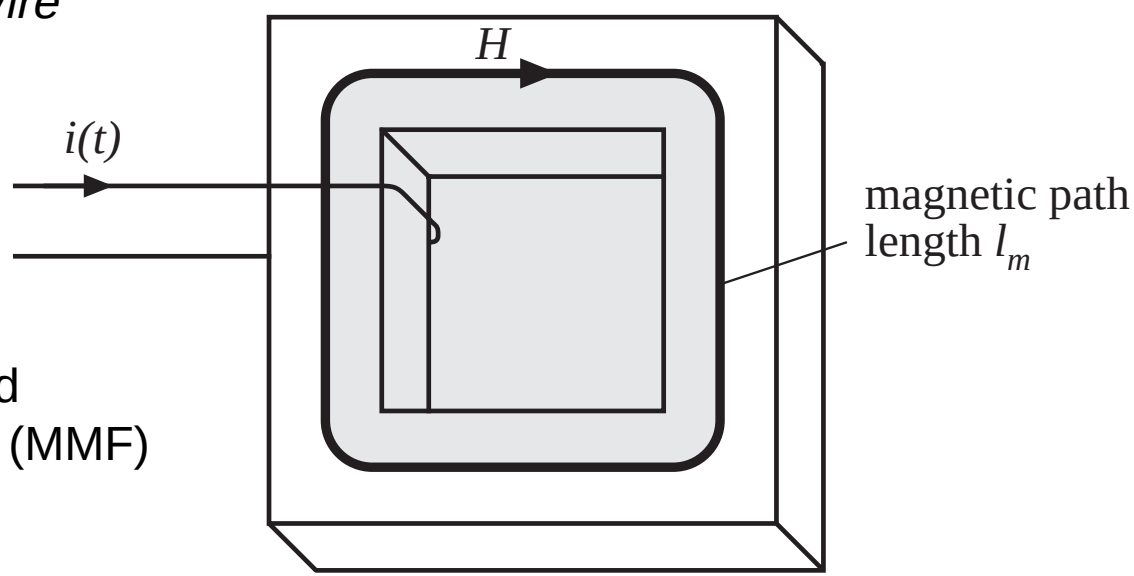

Ampere's law: discussion

- Relates magnetic field strength $H(t)$ to winding current $i(t)$
- We can view winding currents as sources of MMF
- Previous example: total MMF around core, $\mathcal{F}(t) = H(t)l_m$, is equal to the winding current MMF $i(t)$
- The total MMF around a closed loop, accounting for winding current MMF's, is zero

Core material characteristics: the relation between ***B*** and ***H***

Free space

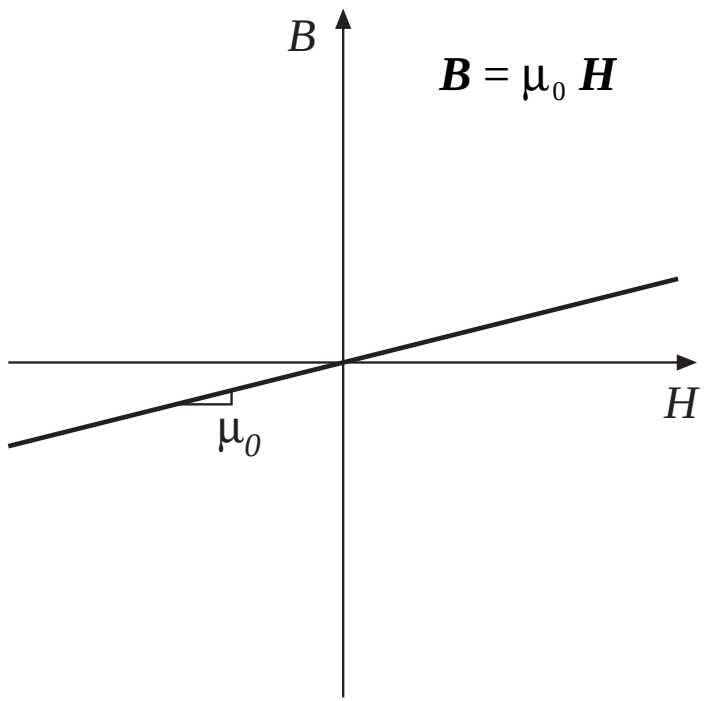

μ_0 = permeability of free space

= $4\pi \cdot 10^{-7}$ Henries per meter

A magnetic core material

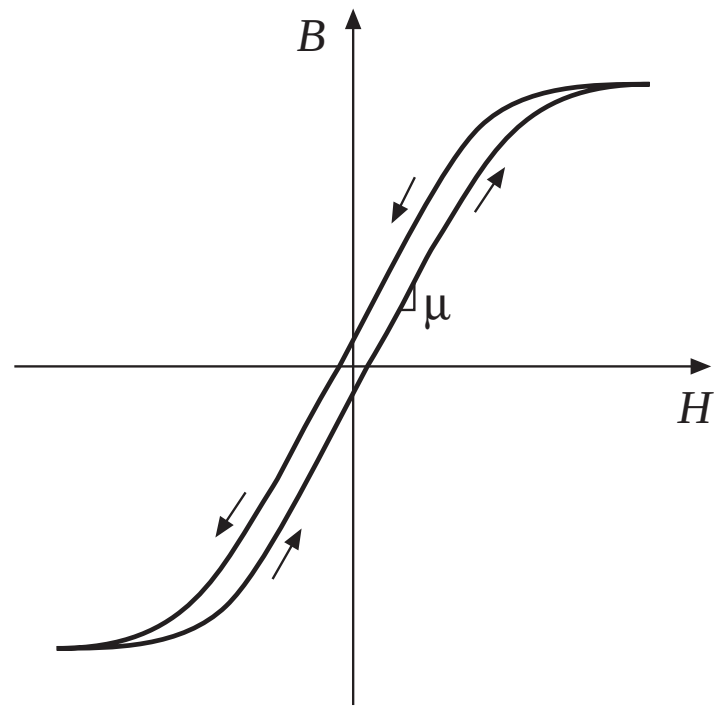

Highly nonlinear, with hysteresis and saturation

Piecewise-linear modeling of core material characteristics

No hysteresis or saturation

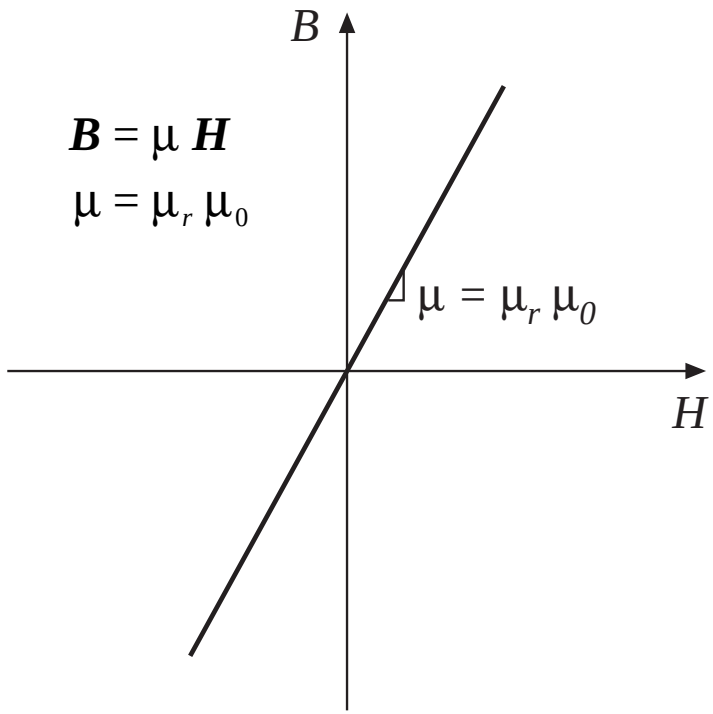

$\boldsymbol{B} = \mu \boldsymbol{H}$

$\mu = \mu_r \mu_0$

Typical $\mu_r = 10^3 - 10^5$

Saturation, no hysteresis

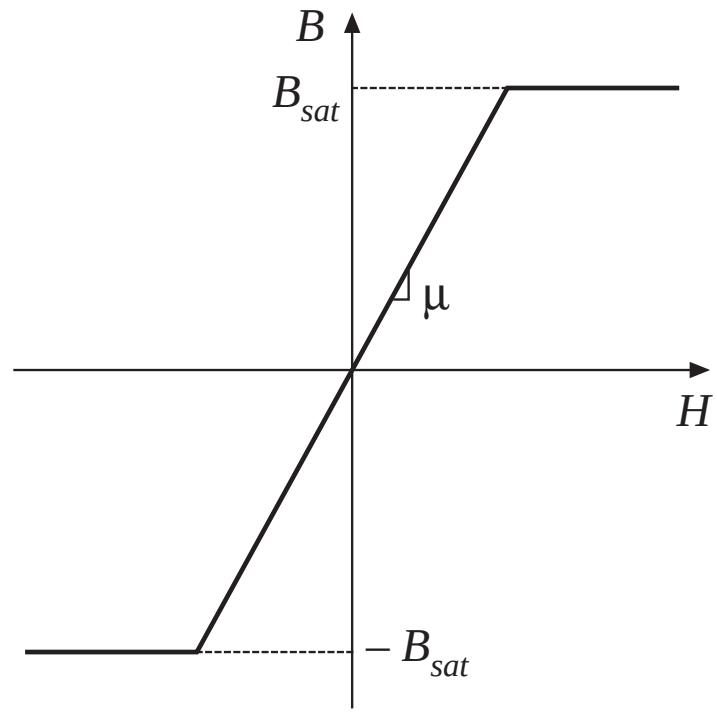

Typical B_{sat} = 0.3-0.5T, ferrite
0.5-1T, powdered iron
1-2T, iron laminations

Units

Table 12.1. Units for magnetic quantities

quantity	*MKS*	*unrationalized cgs*	*conversions*
core material equation	$B = \mu_0 \mu_r H$	$B = \mu_r H$	
B	Tesla	Gauss	$1\text{T} = 10^4\text{G}$
H	Ampere / meter	Oersted	$1\text{A/m} = 4\pi \cdot 10^{-3}$ Oe
Φ	Weber	Maxwell	$1\text{Wb} = 10^8$ Mx $1\text{T} = 1\text{Wb} / \text{m}^2$

Example: a simple inductor

Faraday's law:

For each turn of wire, we can write

$$v_{turn}(t) = \frac{d\Phi(t)}{dt}$$

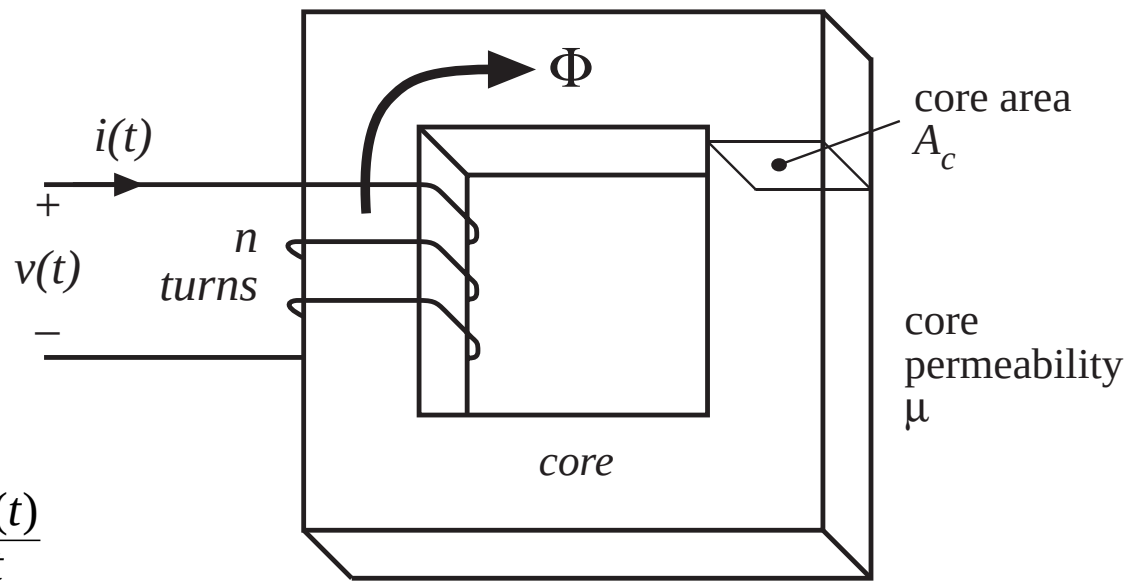

Total winding voltage is

$$v(t) = n\, v_{turn}(t) = n\, \frac{d\Phi(t)}{dt}$$

Express in terms of the average flux density $B(t) = \Phi(t)/A_c$

$$v(t) = n\, A_c\, \frac{dB(t)}{dt}$$

Inductor example: Ampere's law

Choose a closed path which follows the average magnetic field line around the interior of the core. Length of this path is called the *mean magnetic path length* l_m.

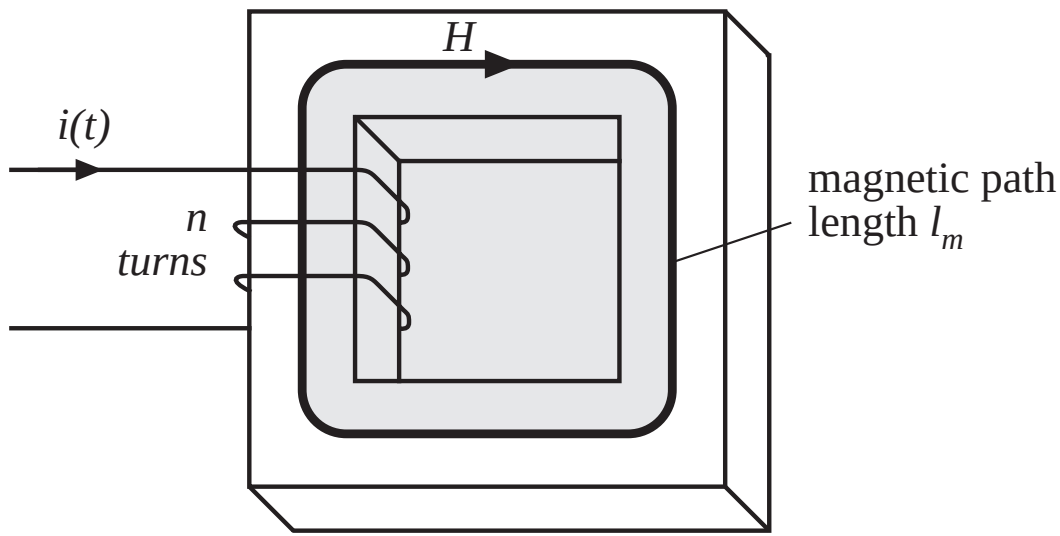

For uniform field strength $H(t)$, the core MMF around the path is $H\ l_m$.

Winding contains n turns of wire, each carrying current $i(t)$. The net current passing through the path interior (i.e., through the core window) is $ni(t)$.

From Ampere's law, we have

$$H(t)\ l_m = n\ i(t)$$

Inductor example: core material model

$$B = \begin{cases} B_{sat} & \text{for } H \geq B_{sat} / \mu \\ \mu H & \text{for } \left| H \right| < B_{sat} / \mu \\ -B_{sat} & \text{for } H \leq B_{sat} / \mu \end{cases}$$

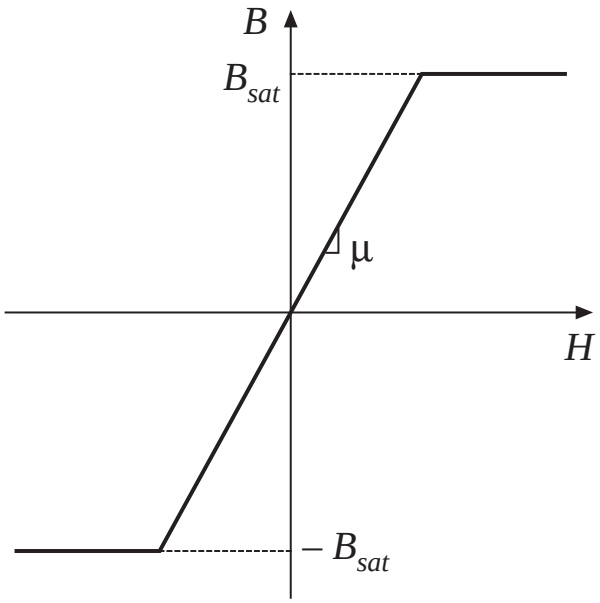

Find winding current at onset of saturation: substitute $i = I_{sat}$ and $H = B_{sat}/\mu$ into equation previously derived via Ampere's law. Result is

$$I_{sat} = \frac{B_{sat}\, l_m}{\mu\, n}$$

Electrical terminal characteristics

We have:

$$v(t) = n\,A_c \frac{dB(t)}{dt} \qquad H(t)\,l_m = n\,i(t) \qquad B = \begin{cases} B_{sat} & \text{for } H \geq B_{sat}/\mu \\ \mu\,H & \text{for } |H| < B_{sat}/\mu \\ -B_{sat} & \text{for } H \leq B_{sat}/\mu \end{cases}$$

Eliminate B and H, and solve for relation between v and i. For $|\,i\,| < I_{sat}$,

$$v(t) = \mu\,n\,A_c \frac{dH(t)}{dt} \longrightarrow v(t) = \frac{\mu\,n^2 A_c}{l_m} \frac{di(t)}{dt}$$

which is of the form

$$v(t) = L \frac{di(t)}{dt} \qquad \text{with} \qquad L = \frac{\mu\,n^2 A_c}{l_m}$$

—an inductor

For $|\,i\,| > I_{sat}$ the flux density is constant and equal to B_{sat}. Faraday's law then predicts

$$v(t) = n\,A_c \frac{dB_{sat}}{dt} = 0$$

—saturation leads to short circuit

12.1.2. Magnetic circuits

Uniform flux and magnetic field inside a rectangular element:

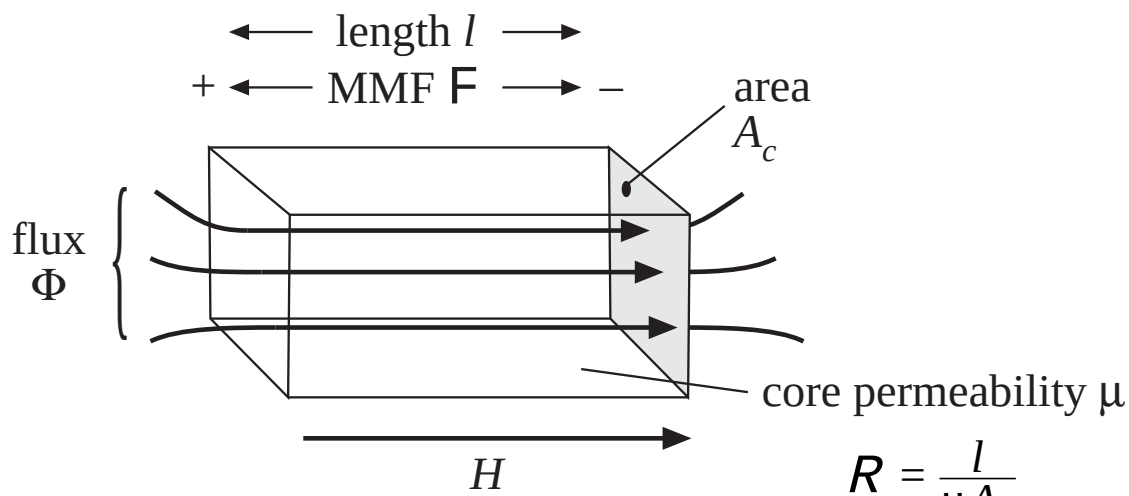

$$R = \frac{l}{\mu A_c}$$

MMF between ends of element is

$$F = H\,l$$

Since $H = B / \mu$ and $B = \Phi / Ac$, we can express F as

$$F = \frac{l}{\mu A_c}\Phi \qquad \text{with} \qquad R = \frac{l}{\mu A_c}$$

A corresponding model:

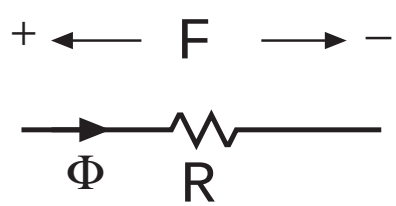

R = reluctance of element

Magnetic circuits: magnetic structures composed of multiple windings and heterogeneous elements

- Represent each element with reluctance
- Windings are sources of MMF
- MMF $\rightarrow$ voltage, flux $\rightarrow$ current
- Solve magnetic circuit using Kirchoff's laws, etc.

Magnetic analog of Kirchoff's current law

Divergence of $\boldsymbol{B} = 0$

Flux lines are continuous and cannot end

Total flux entering a node must be zero

Physical structure

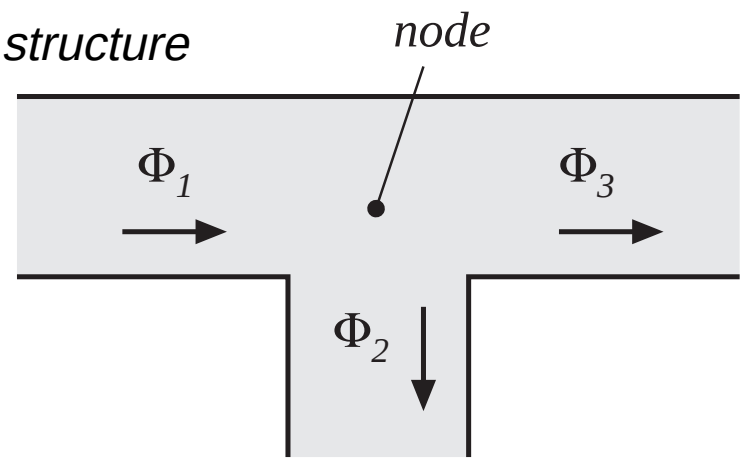

Magnetic circuit

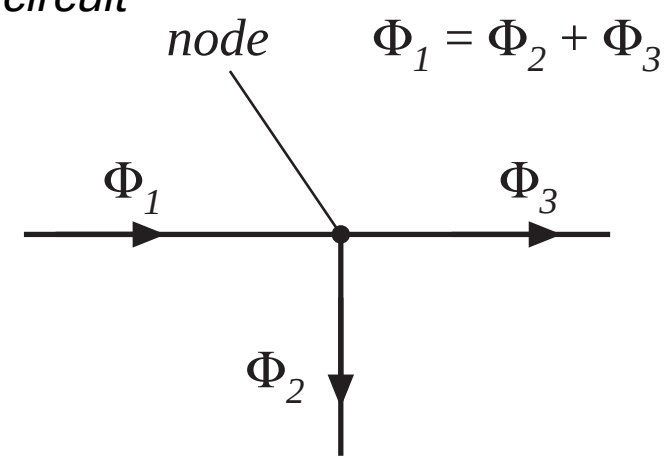

Magnetic analog of Kirchoff's voltage law

Follows from Ampere's law:

$$\oint_{closed\ path} \boldsymbol{H} \cdot \boldsymbol{dl} = total\ current\ passing\ through\ interior\ of\ path$$

Left-hand side: sum of MMF's across the reluctances around the closed path

Right-hand side: currents in windings are sources of MMF's. An n-turn winding carrying current $i(t)$ is modeled as an MMF (voltage) source, of value $ni(t)$.

Total MMF's around the closed path add up to zero.

Example: inductor with air gap

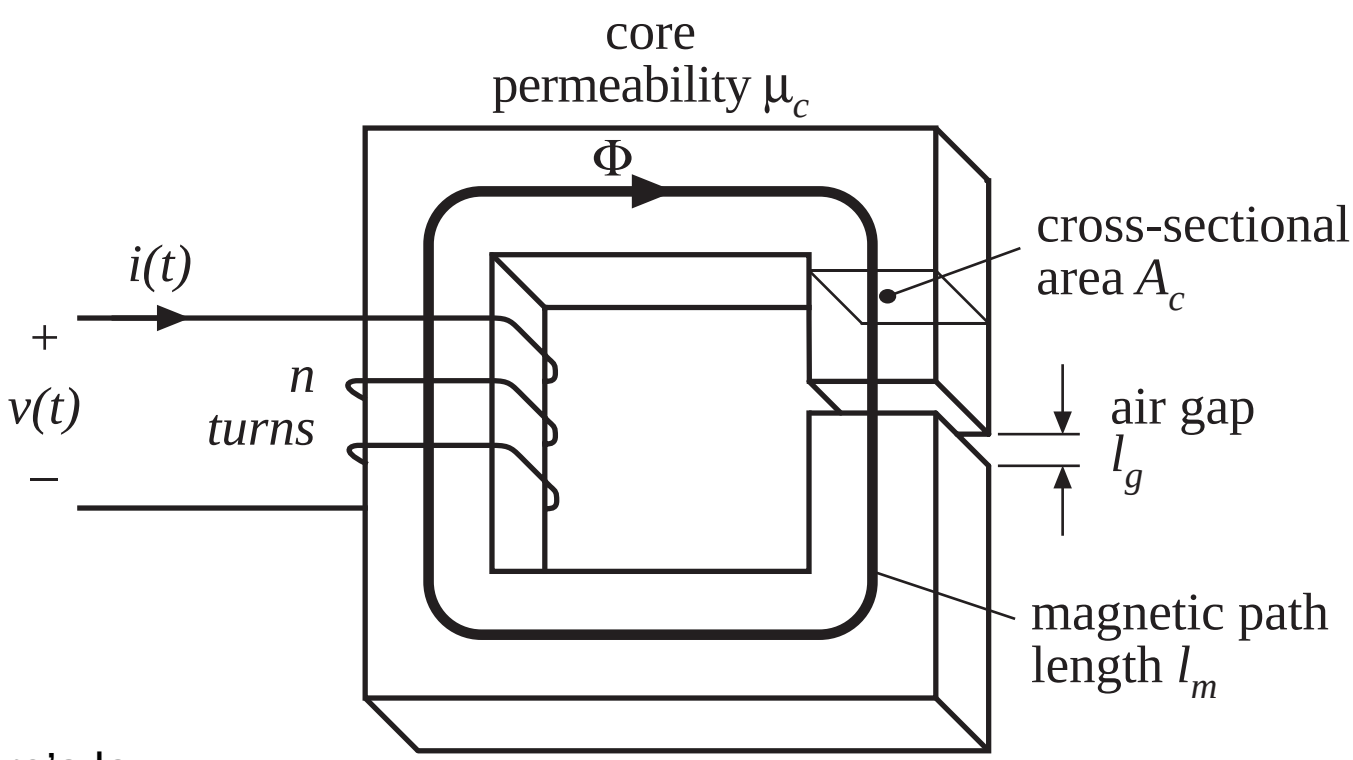

Ampere's law:

$$F_c + F_g = n\,i$$

Magnetic circuit model

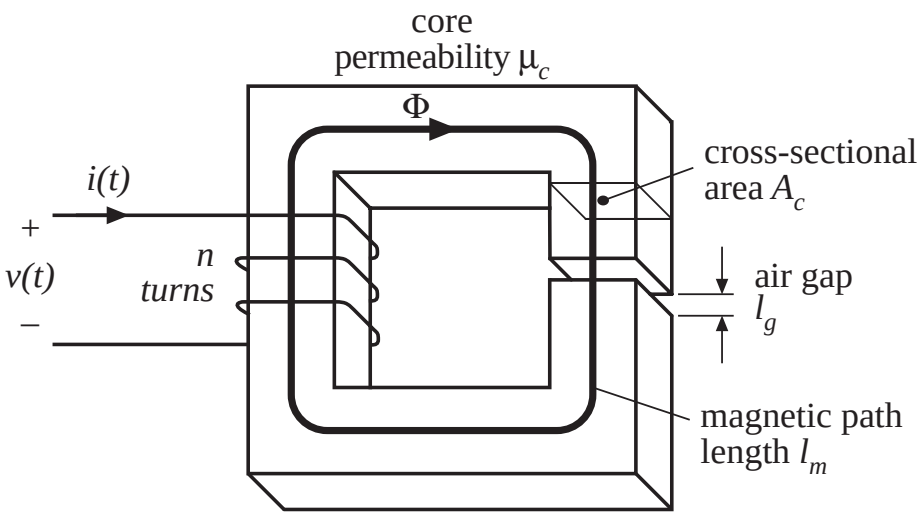

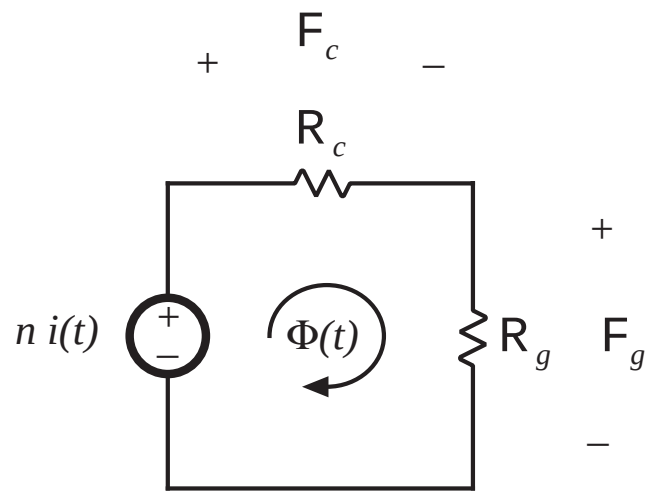

$$F_c + F_g = n\,i$$

$$n\,i = \Phi\left(R_c + R_g\right)$$

$$R_c = \frac{l_c}{\mu\,A_c}$$

$$R_g = \frac{l_g}{\mu_0\,A_c}$$

Solution of model

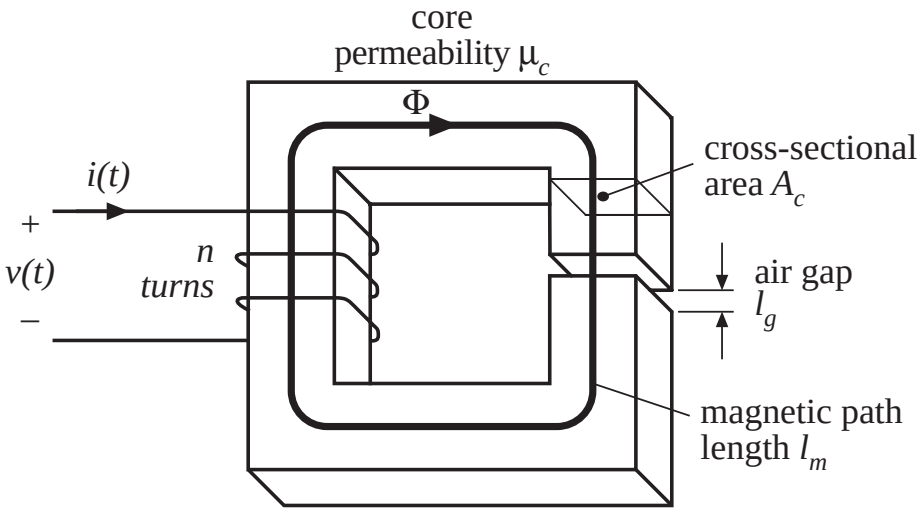

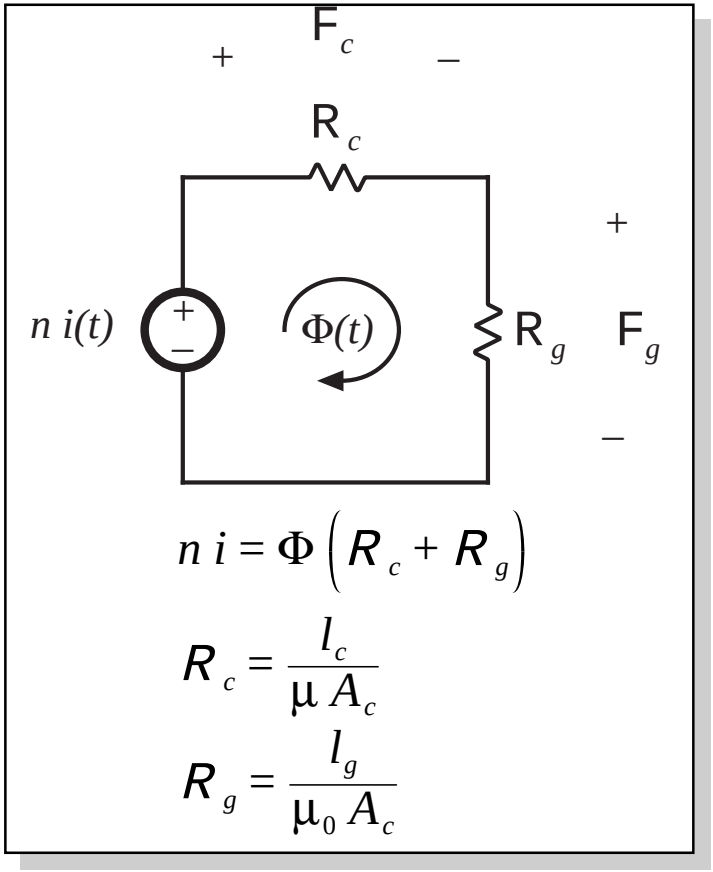

Faraday's law: $v(t) = n\dfrac{d\Phi(t)}{dt}$

Substitute for Φ: $v(t) = \dfrac{n^2}{R_c + R_g}\dfrac{di(t)}{dt}$

Hence inductance is

$$L = \frac{n^2}{R_c + R_g}$$

Effect of air gap

$$n\,i = \Phi\left(R_c + R_g\right)$$

$$L = \frac{n^2}{R_c + R_g}$$

$$\Phi_{sat} = B_{sat}A_c$$

$$I_{sat} = \frac{B_{sat}A_c}{n}\left(R_c + R_g\right)$$

Effect of air gap:

- decrease inductance
- increase saturation current
- inductance is less dependent on core permeability

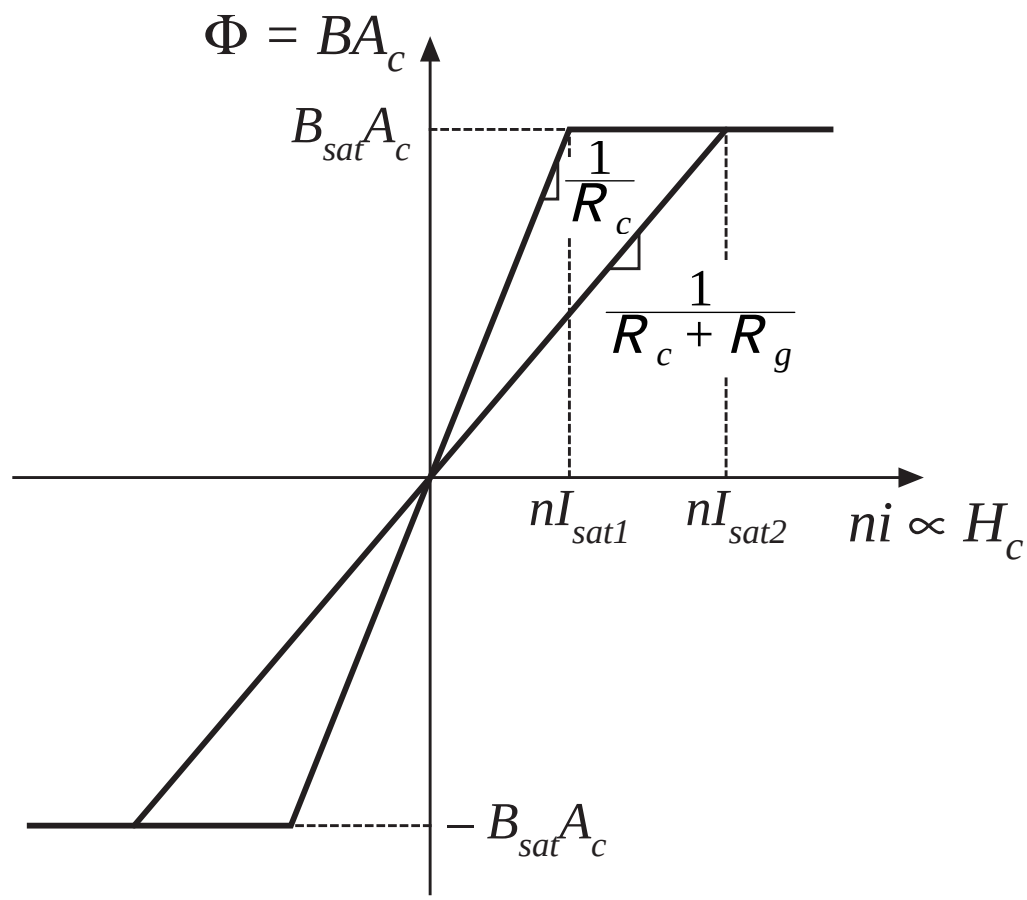

12.2. Transformer modeling

Two windings, no air gap:

$$R = \frac{l_m}{\mu A_c}$$

$$F_c = n_1 i_1 + n_2 i_2$$

$$\Phi R = n_1 i_1 + n_2 i_2$$

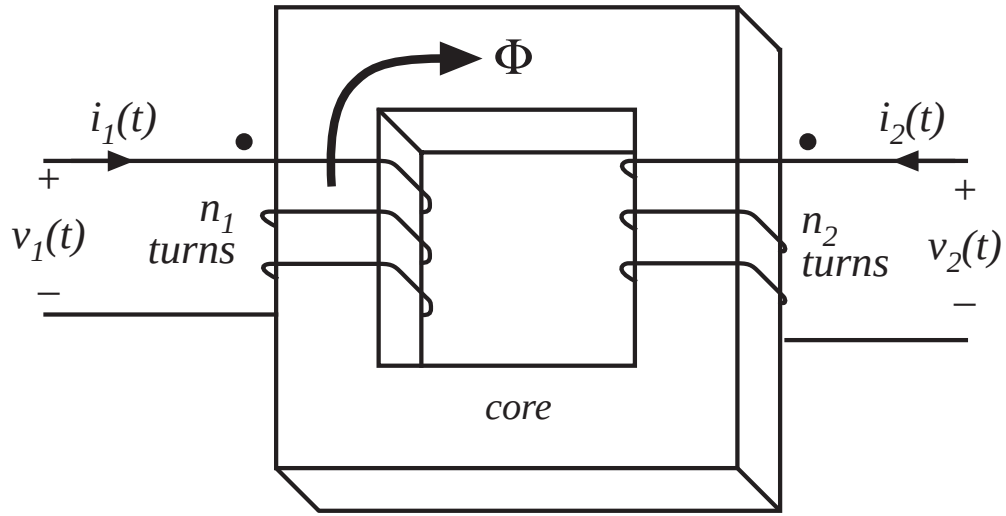

Magnetic circuit model:

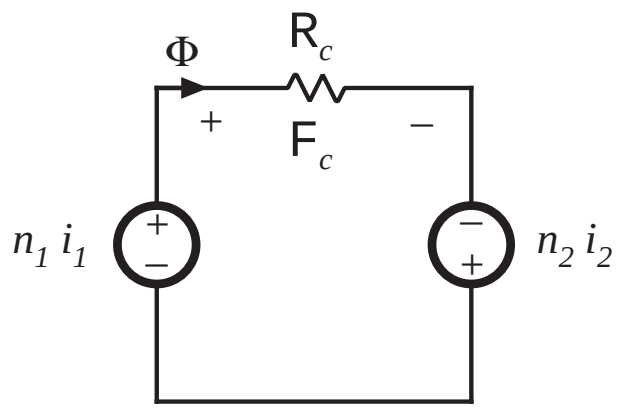

12.2.1. The ideal transformer

In the ideal transformer, the core reluctance $\mathcal{R}$ approaches zero.

MMF $\mathcal{F}_c = \Phi \mathcal{R}$ also approaches zero. We then obtain

$$0 = n_1 i_1 + n_2 i_2$$

Also, by Faraday's law,

$$v_1 = n_1 \frac{d\Phi}{dt}$$

$$v_2 = n_2 \frac{d\Phi}{dt}$$

Eliminate Φ :

$$\frac{d\Phi}{dt} = \frac{v_1}{n_1} = \frac{v_2}{n_2}$$

Ideal transformer equations:

$$\frac{v_1}{n_1} = \frac{v_2}{n_2} \quad \text{and} \quad n_1 i_1 + n_2 i_2 = 0$$

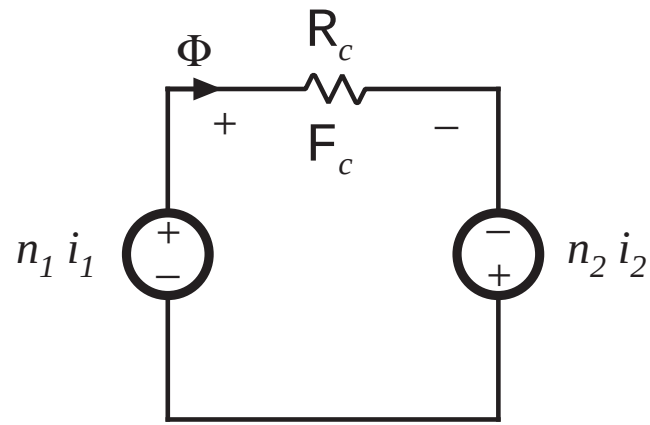

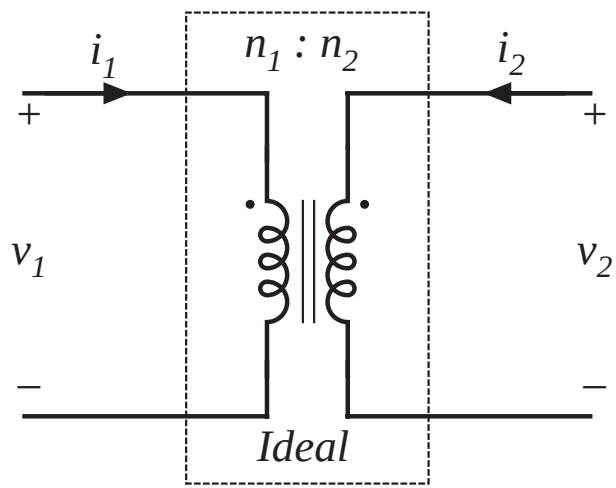

12.2.2. The magnetizing inductance

For nonzero core reluctance, we obtain

$$\Phi R = n_1 i_1 + n_2 i_2 \quad \text{with} \quad v_1 = n_1 \frac{d\Phi}{dt}$$

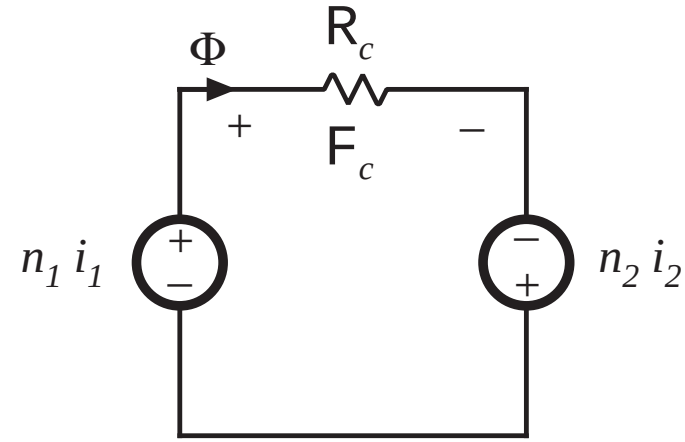

Eliminate Φ:

$$v_1 = \frac{n_1^2}{R} \frac{d}{dt}\left[i_1 + \frac{n_2}{n_1} i_2 \right]$$

This equation is of the form

$$v_1 = L_{mp} \frac{d\, i_{mp}}{dt}$$

with $L_{mp} = \dfrac{n_1^2}{R}$

$$i_{mp} = i_1 + \frac{n_2}{n_1} i_2$$

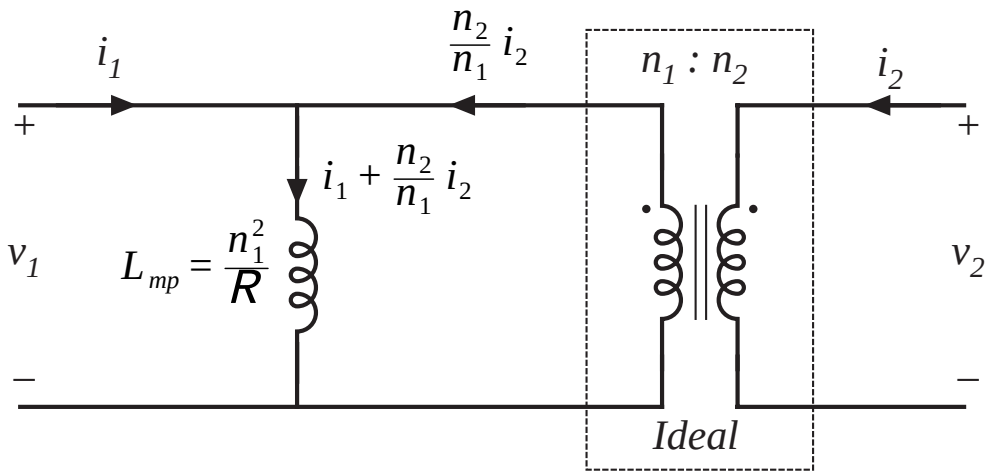

Magnetizing inductance: discussion

- Models magnetization of core material
- A real, physical inductor, that exhibits saturation and hysteresis
- If the secondary winding is disconnected:

  we are left with the primary winding on the core

  primary winding then behaves as an inductor

  the resulting inductor is the magnetizing inductance, referred to the primary winding
- Magnetizing current causes the ratio of winding currents to differ from the turns ratio

Transformer saturation

- Saturation occurs when core flux density $B(t)$ exceeds saturation flux density B_{sat}.
- When core saturates, the magnetizing current becomes large, the impedance of the magnetizing inductance becomes small, and the windings are effectively shorted out.
- Large winding currents $i_1(t)$ and $i_2(t)$ ***do not*** necessarily lead to saturation. If

$$0 = n_1 i_1 + n_2 i_2$$

  then the magnetizing current is zero, and there is no net magnetization of the core.
- Saturation is caused by excessive applied volt-seconds

Saturation vs. applied volt-seconds

Magnetizing current depends on the integral of the applied winding voltage:

$$i_{mp}(t) = \frac{1}{L_{mp}} \int v_1(t)\, dt$$

Flux density is proportional:

$$B(t) = \frac{1}{n_1 A_c} \int v_1(t)\, dt$$

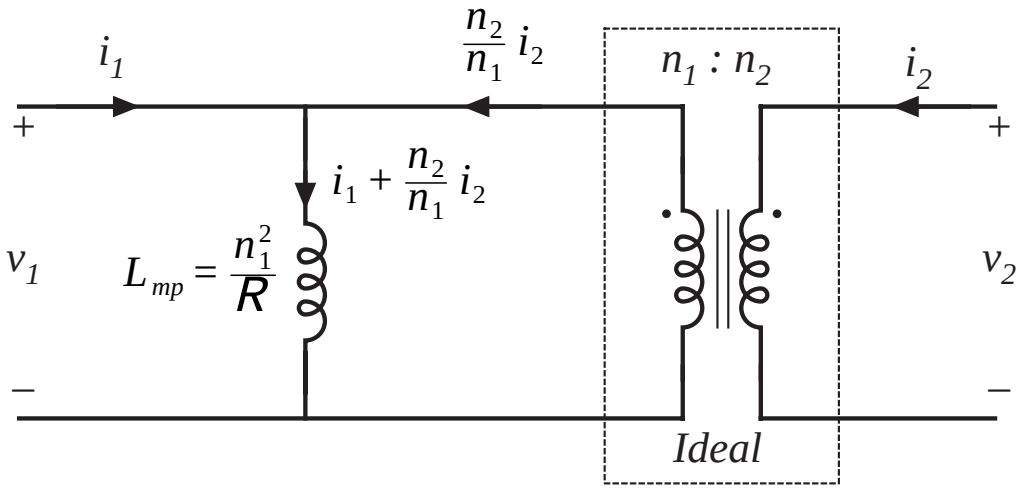

Flux density befcomes large, and core saturates, when the applied volt-seconds λ_1 are too large, where

$$\lambda_1 = \int_{t_1}^{t_2} v_1(t)\, dt$$

limits of integration chosen to coincide with positive portion of applied voltage waveform

12.2.3. Leakage inductances

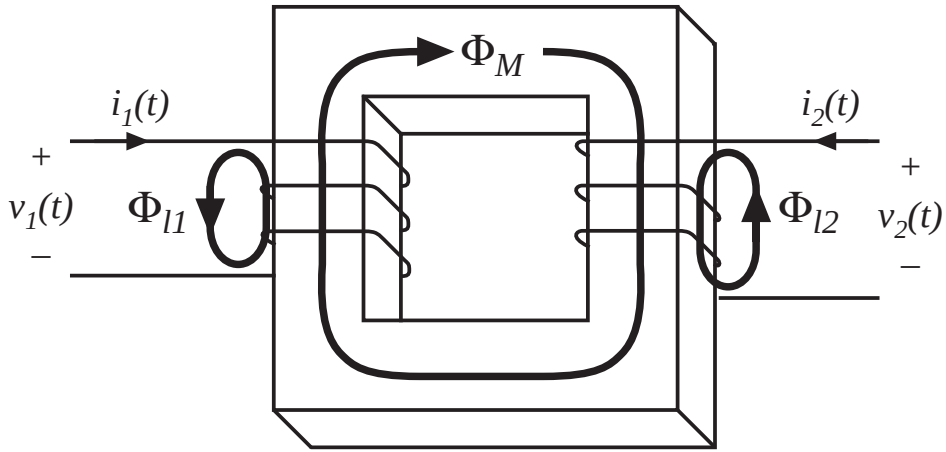

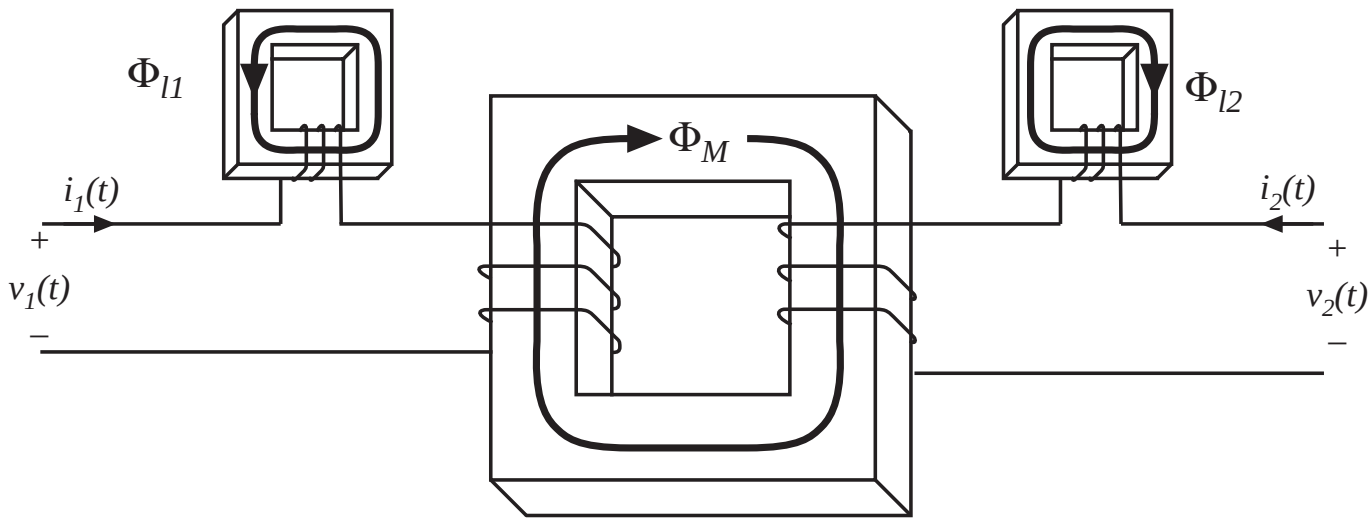

Transformer model, including leakage inductance

$$\begin{bmatrix} v_1(t) \\ v_2(t) \end{bmatrix} = \begin{bmatrix} L_{11} & L_{12} \\ L_{12} & L_{22} \end{bmatrix} \frac{d}{dt} \begin{bmatrix} i_1(t) \\ i_2(t) \end{bmatrix}$$

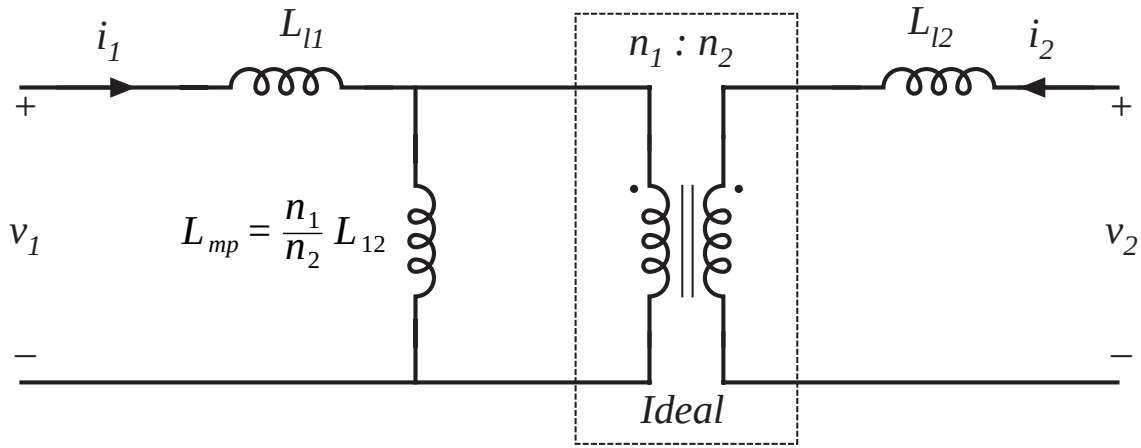

mutual inductance

$$L_{12} = \frac{n_1 n_2}{\mathcal{R}} = \frac{n_2}{n_1} L_{mp}$$

primary and secondary self-inductances

$$L_{11} = L_{l1} + \frac{n_1}{n_2} L_{12}$$

$$L_{22} = L_{l2} + \frac{n_2}{n_1} L_{12}$$

effective turns ratio $\quad n_e = \sqrt{\frac{L_{22}}{L_{11}}}$

coupling coefficient $\quad k = \frac{L_{12}}{\sqrt{L_{11} L_{22}}}$

12.3. Loss mechanisms in magnetic devices

Low-frequency losses:

- Dc copper loss
- Core loss: hysteresis loss

High-frequency losses: the skin effect

- Core loss: classical eddy current losses
- Eddy current losses in ferrite cores

High frequency copper loss: the proximity effect

- Proximity effect: high frequency limit
- MMF diagrams, losses in a layer, and losses in basic multilayer windings
- Effect of PWM waveform harmonics

12.3.1. Core loss

Energy per cycle W flowing into n-turn winding of an inductor, excited by periodic waveforms of frequency f:

$$W = \int_{\text{one cycle}} v(t) i(t) dt$$

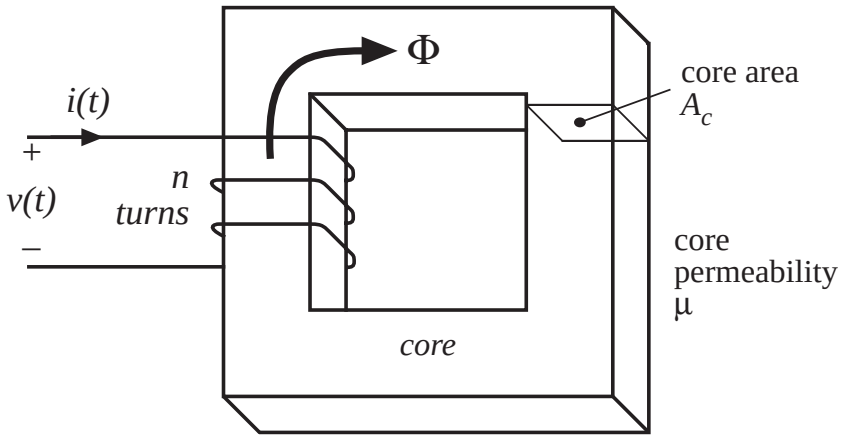

Relate winding voltage and current to core B and H via Faraday's law and Ampere's law:

$$v(t) = n A_c \frac{dB(t)}{dt} \qquad H(t)\, l_m = n\, i(t)$$

Substitute into integral:

$$W = \int_{\text{one cycle}} \left(n A_c \frac{dB(t)}{dt} \right) \left(\frac{H(t) l_m}{n} \right) dt$$

$$= \left(A_c l_m \right) \int_{\text{one cycle}} H\, dB$$

Core loss: Hysteresis loss

$$W = \left(A_c l_m\right) \int_{\text{one cycle}} H\,dB$$

The term $A_c l_m$ is the volume of the core, while the integral is the area of the B-H loop.

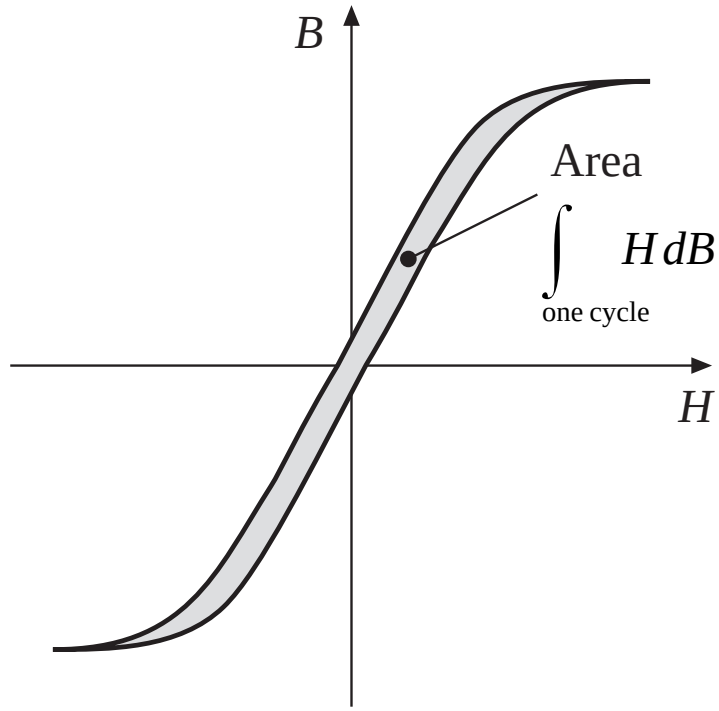

(energy lost per cycle) = (core volume) (area of B-H loop)

$$P_H = \left(f\right)\left(A_c l_m\right) \int_{\text{one cycle}} H\,dB$$

Hysteresis loss is directly proportional to applied frequency

Modeling hysteresis loss

- Hysteresis loss varies directly with applied frequency
- Dependence on maximum flux density: how does area of B-H loop depend on maximum flux density (and on applied waveforms)? Emperical equation (Steinmetz equation):

$$P_H = K_H f B_{\max}^{\alpha} (core\ volume)$$

The parameters K_H and α are determined experimentally.

Dependence of P_H on B_{max} is predicted by the theory of magnetic domains.

Core loss: eddy current loss

Magnetic core materials are reasonably good conductors of electric current. Hence, according to Lenz's law, magnetic fields within the core induce currents ("eddy currents") to flow within the core. The eddy currents flow such that they tend to generate a flux which opposes changes in the core flux $\Phi(t)$. The eddy currents tend to prevent flux from penetrating the core.

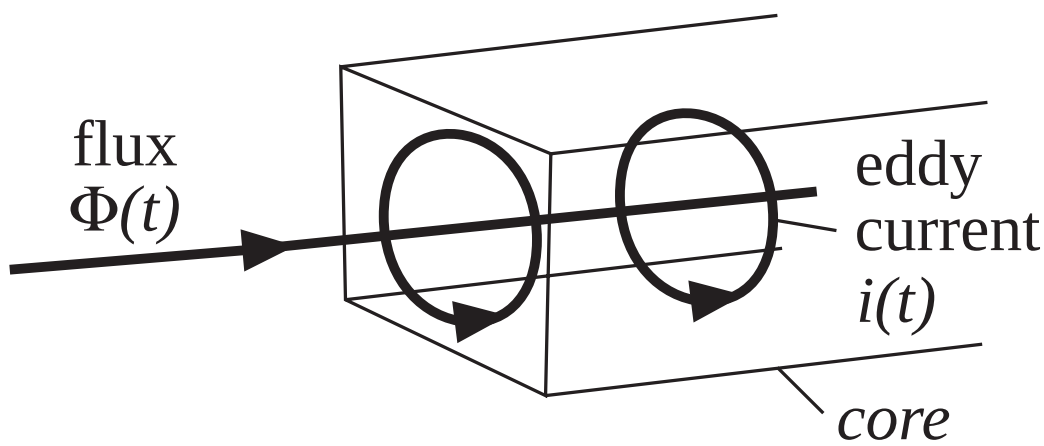

Eddy current loss $i^2(t)R$

Modeling eddy current loss

- Ac flux $\Phi(t)$ induces voltage $v(t)$ in core, according to Faraday's law. Induced voltage is proportional to derivative of $\Phi(t)$. In consequence, magnitude of induced voltage is directly proportional to excitation frequency f.
- If core material impedance Z is purely resistive and independent of frequency, $Z = R$, then eddy current magnitude is proportional to voltage: $i(t) = v(t)/R$. Hence magnitude of $i(t)$ is directly proportional to excitation frequency f.
- Eddy current power loss $i^2(t)R$ then varies with square of excitation frequency f.
- Classical Steinmetz equation for eddy current loss:

$$P_E = K_E f^2 B_{\max}^2 (\textit{core volume})$$

- Ferrite core material impedance is capacitive. This causes eddy current power loss to increase as f^4.

Total core loss: manufacturer's data

Ferrite core material

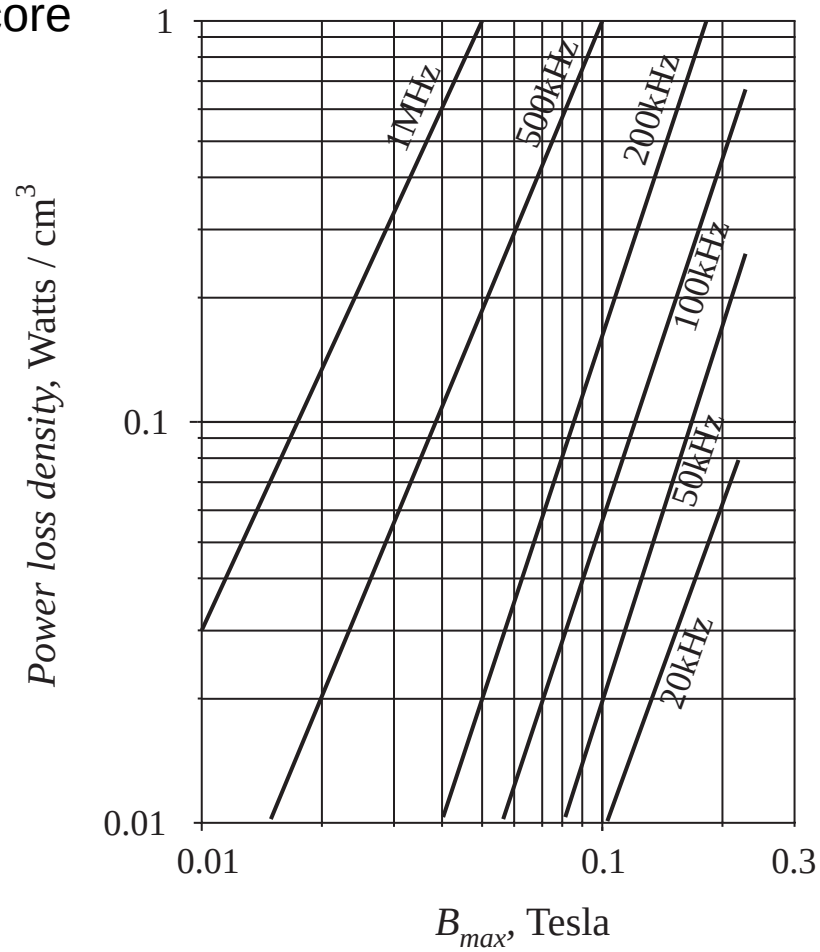

Empirical equation, at a fixed frequency:

$$P_{fe} = K_{fe} B_{max}^{\beta} A_c l_m$$

Core materials

Core type	B_{sat}	Relative core loss	Applications
Laminations iron, silicon steel	1.5 - 2.0 T	high	50-60 Hz transformers, inductors
Powdered cores powdered iron, molypermalloy	0.6 - 0.8 T	medium	1 kHz transformers, 100 kHz filter inductors
Ferrite Manganese-zinc, Nickel-zinc	0.25 - 0.5 T	low	20 kHz - 1 MHz transformers, ac inductors

12.3.2. Low-frequency copper loss

DC resistance of wire

$$R = \rho \frac{l_b}{A_w}$$

where A_w is the wire bare cross-sectional area, and l_b is the length of the wire. The resistivity ρ is equal to $1.724 \cdot 10^{-6}\ \Omega\ \mathrm{cm}$ for soft-annealed copper at room temperature. This resistivity increases to $2.3 \cdot 10^{-6}\ \Omega\ \mathrm{cm}$ at $100^\circ\mathrm{C}$.

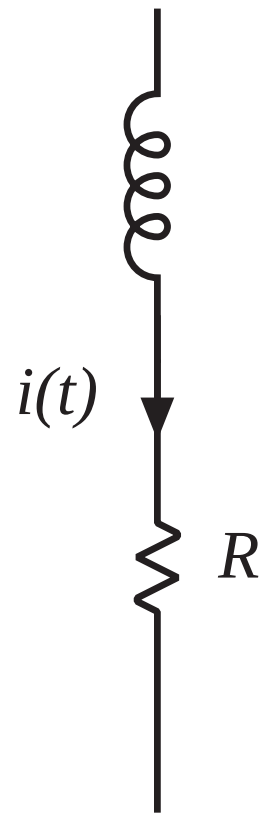

The wire resistance leads to a power loss of

$$P_{cu} = I_{rms}^2 R$$

12.4. Eddy currents in winding conductors
12.4.1. The skin effect

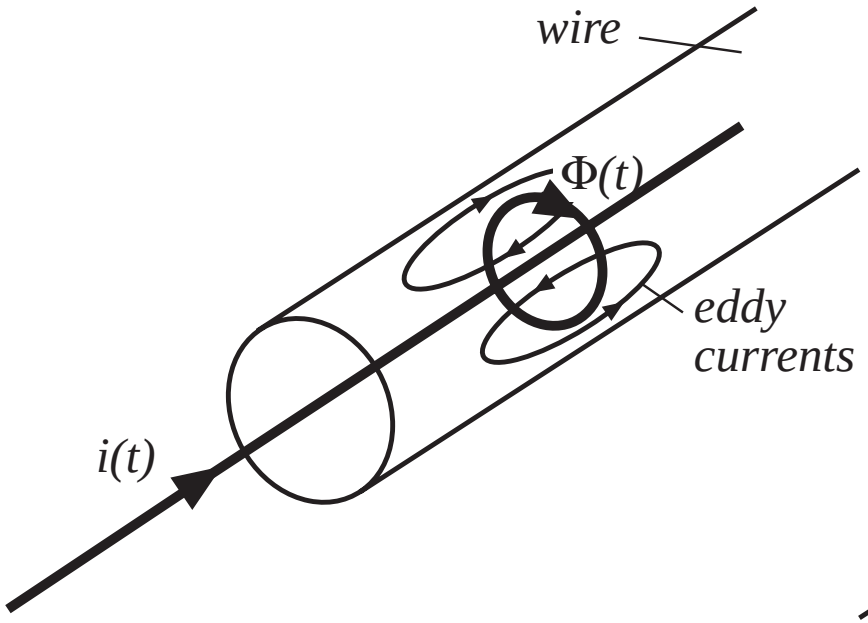

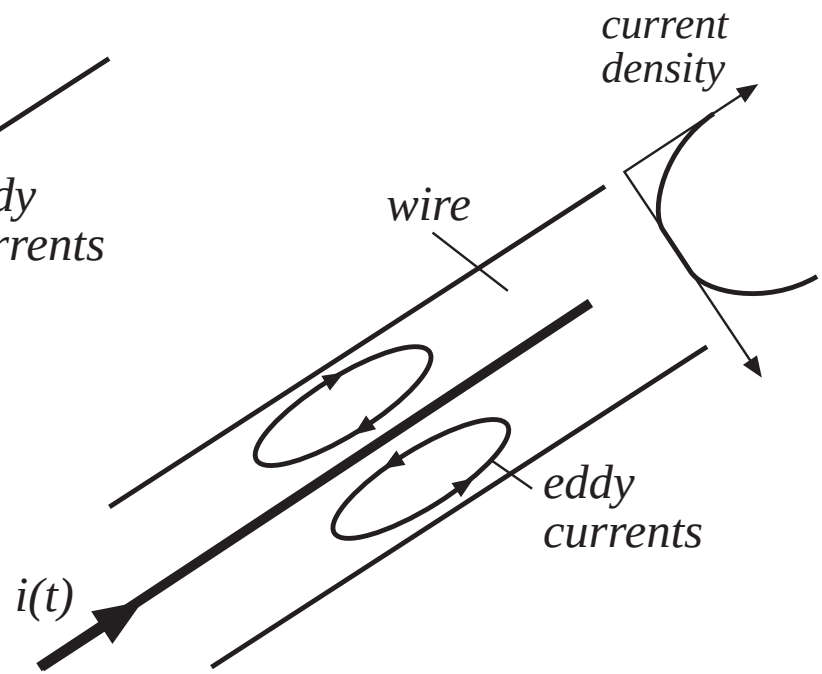

Penetration depth δ

For sinusoidal currents: current density is an exponentially decaying function of distance into the conductor, with characteristic length δ known as the *penetration depth* or *skin depth*.

$$\delta = \sqrt{\frac{\rho}{\pi \mu f}}$$

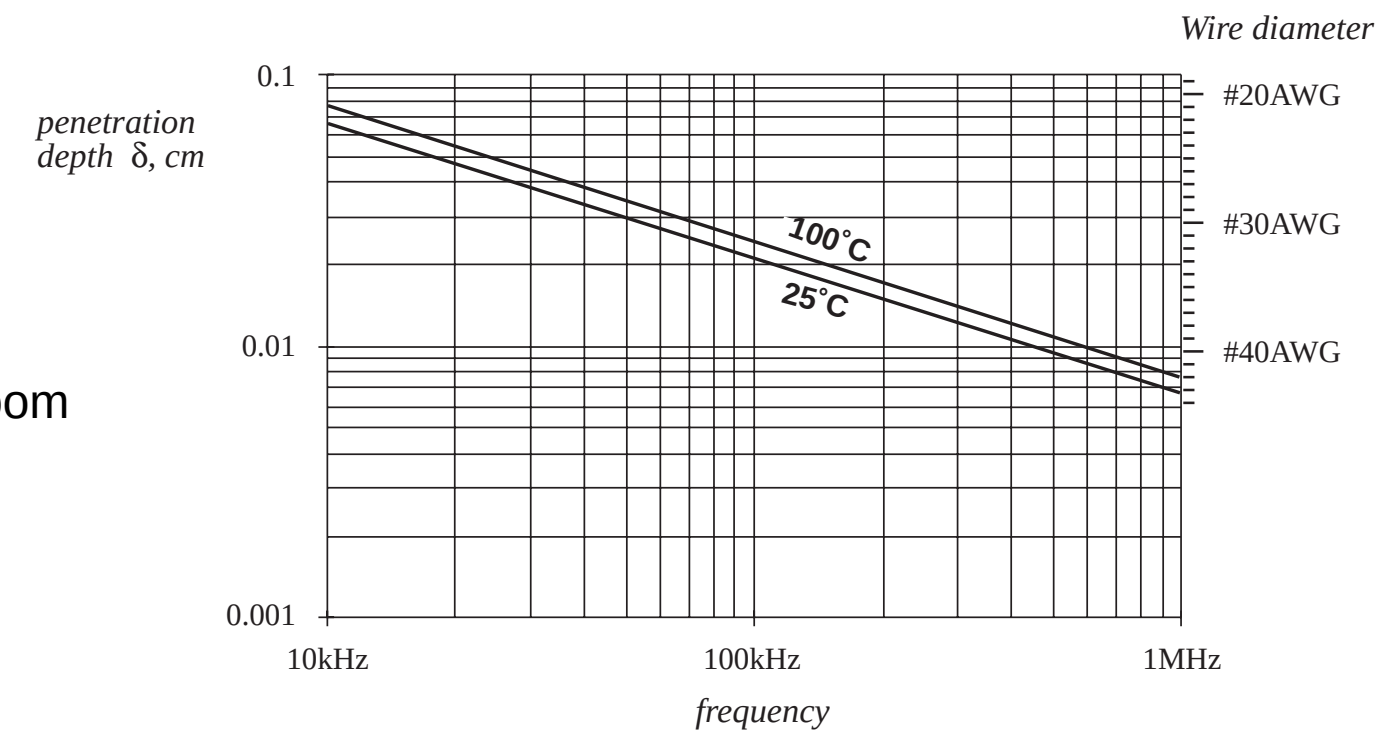

For copper at room temperature:

$$\delta = \frac{7.5}{\sqrt{f}} \text{ cm}$$

12.4.2. The proximity effect

Ac current in a conductor induces eddy currents in adjacent conductors by a process called the *proximity effect*. This causes significant power loss in the windings of high-frequency transformers and ac inductors.

A multi-layer foil winding, with $d >> \delta$. Each layer carries net current $i(t)$.

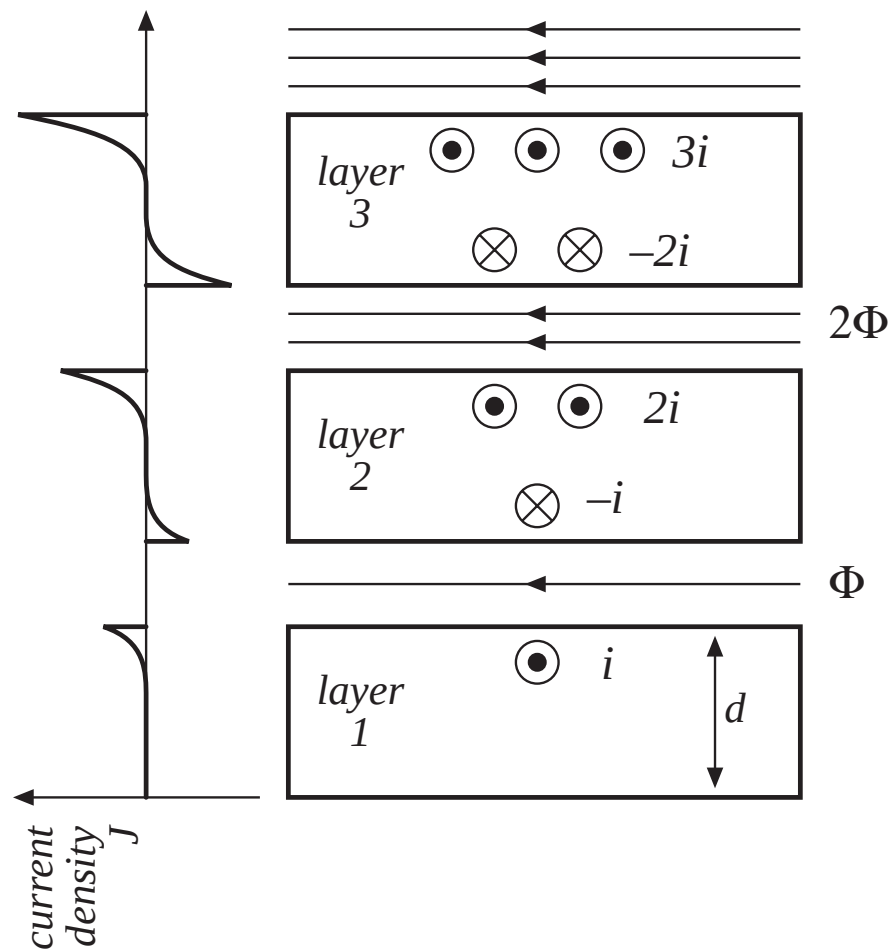

Estimating proximity loss: high-frequency limit

Let P_1 be power loss in layer 1:

$$P_1 = I_{rms}^2 \left(R_{dc} \frac{d}{\delta} \right)$$

Power loss P_2 in layer 2 is:

$$P_2 = I_{rms}^2 \left(R_{dc} \frac{d}{\delta} \right) + \left(2I_{rms} \right)^2 \left(R_{dc} \frac{d}{\delta} \right)$$

$$= 5P_1$$

Power loss P_3 in layer 3 is:

$$P_3 = \left(2I_{rms} \right)^2 \left(R_{dc} \frac{d}{\delta} \right) + \left(3I_{rms} \right)^2 \left(R_{dc} \frac{d}{\delta} \right)$$

$$= 13P_1$$

Power loss P_m in layer m is:

$$P_m = ((m-1)^2 + m^2)\, P_1$$

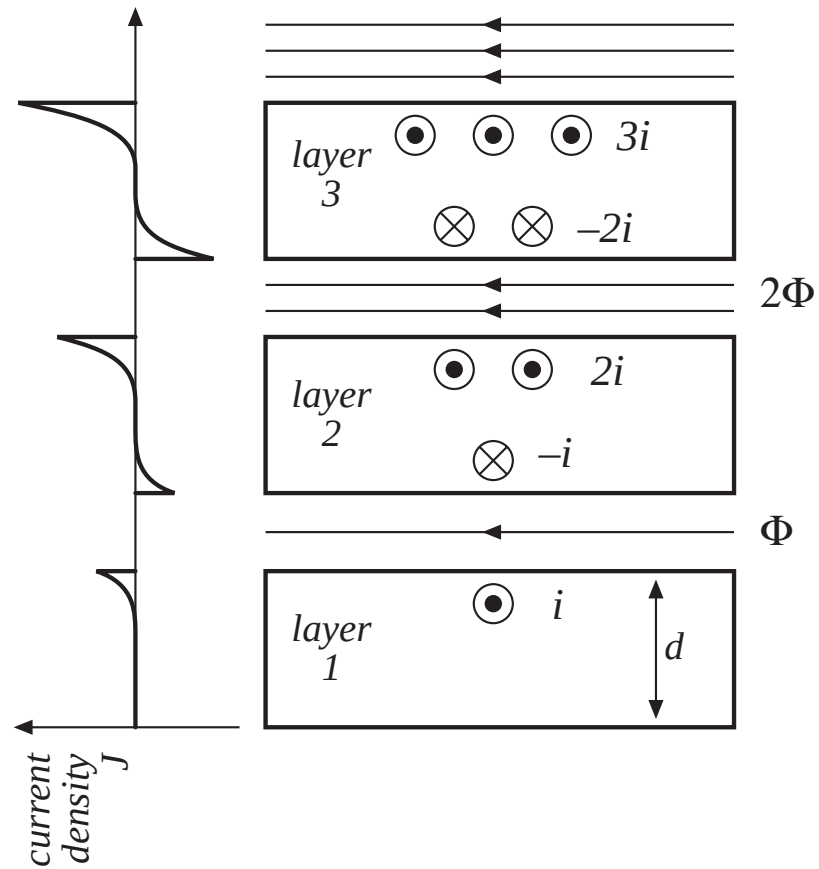

Total loss in M-layer winding: high-frequency limit

Add up losses in each layer:

$$P_w \Big|_{d >> \delta} = \sum_{j=1}^{M} P_j = \frac{M}{3} \left(2M^2 + 1 \right) P_1$$

Compare with dc copper loss:

If foil thickness were $d = \delta$, then at dc each layer would produce copper loss P_1. The copper loss of the M-layer winding would be

$$P_{w,dc} \Big|_{d = \delta} = M \, P_1$$

For foil thicknesses other than $d = \delta$, the dc resistance and power loss are changed by a factor of d/δ. The total winding dc copper loss is

$$P_{w,dc} = M \, P_1 \, \frac{\delta}{d}$$

So the proximity effect increases the copper loss by a factor of

$$F_R \Big|_{d >> \delta} = \frac{P_w \Big|_{d >> \delta}}{P_{w,dc}} = \frac{1}{3} \frac{d}{\delta} \left(2M^2 + 1 \right)$$

Approximating a layer of round conductors as an effective foil conductor

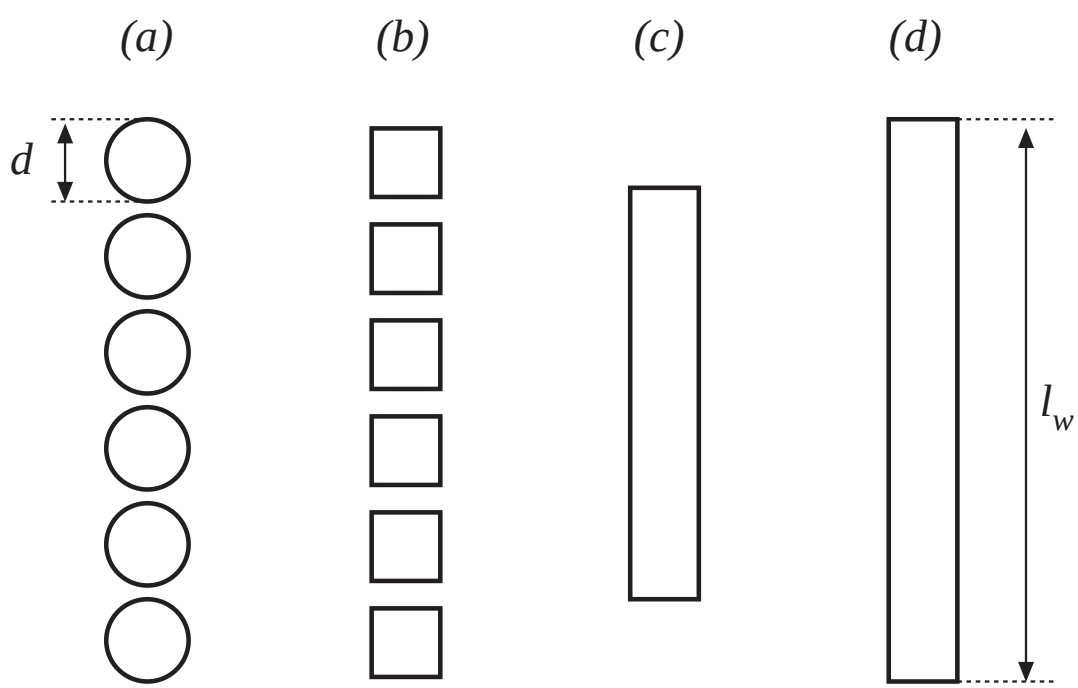

Conductor spacing factor:

$$\eta = \sqrt{\frac{\pi}{4}}\, d\, \frac{n_l}{l_w}$$

Effective ratio of conductor thickness to skin depth:

$$\varphi = \sqrt{\eta}\, \frac{d}{\delta}$$

12.4.3. Magnetic fields in the vicinity of winding conductors: MMF diagrams

Two-winding transformer example

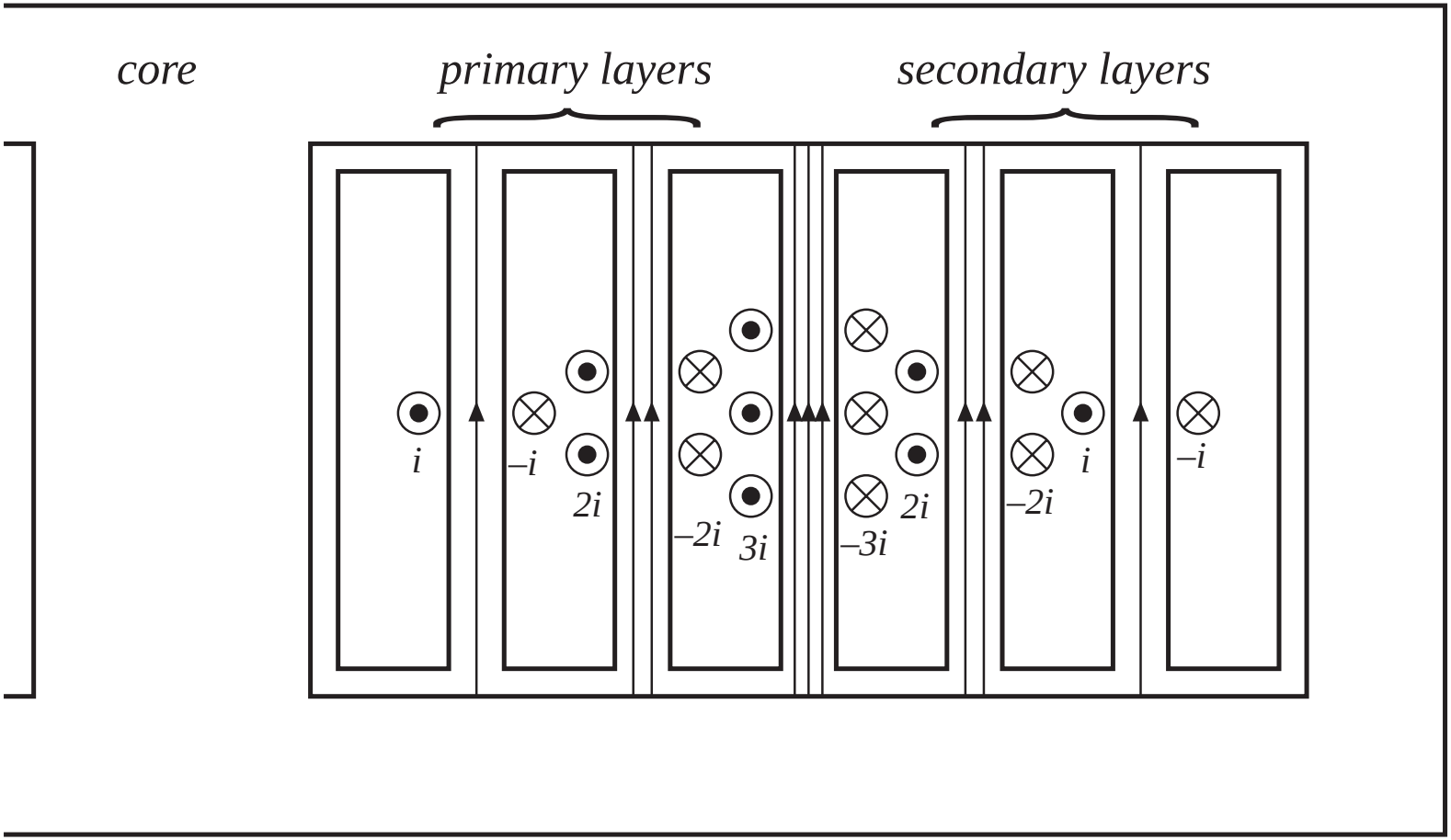

Transformer example: magnetic field lines

$$\left(m_p - m_s\right) i = \mathcal{F}(x) \qquad H(x) = \frac{\mathcal{F}(x)}{l_w}$$

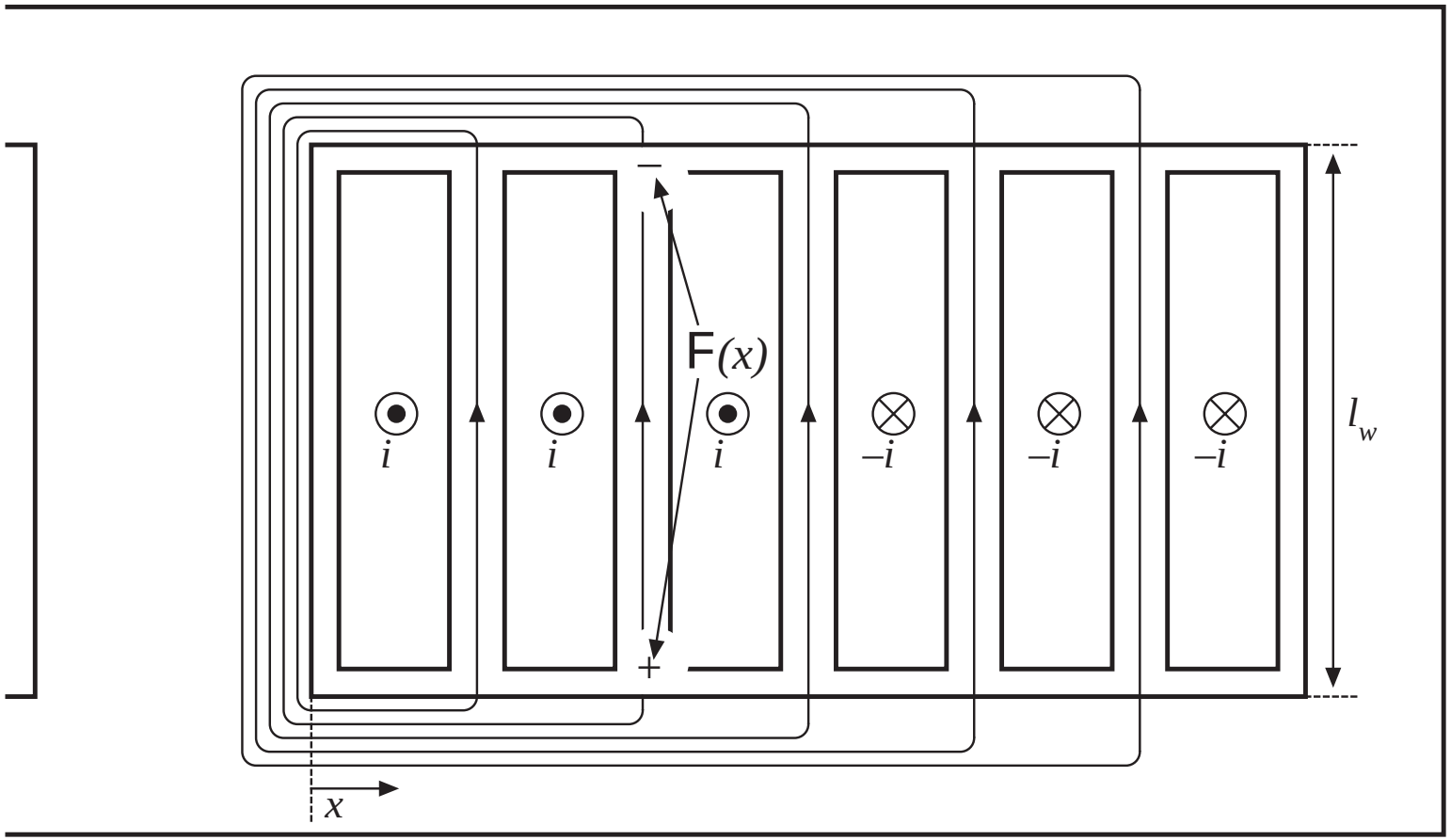

Ampere's law and MMF diagram

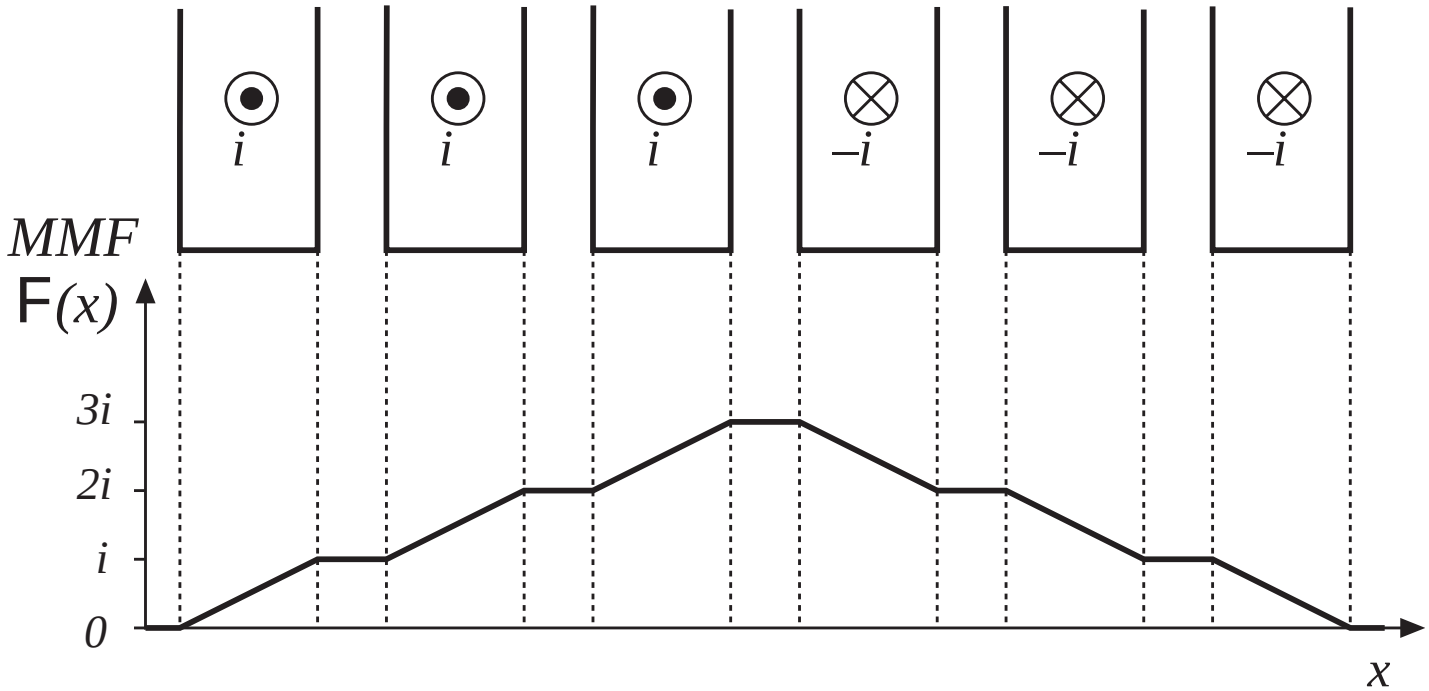

$$\left(m_p - m_s\right) i = F(x)$$

$$H(x) = \frac{F(x)}{l_w}$$

MMF diagram for $d >> \delta$

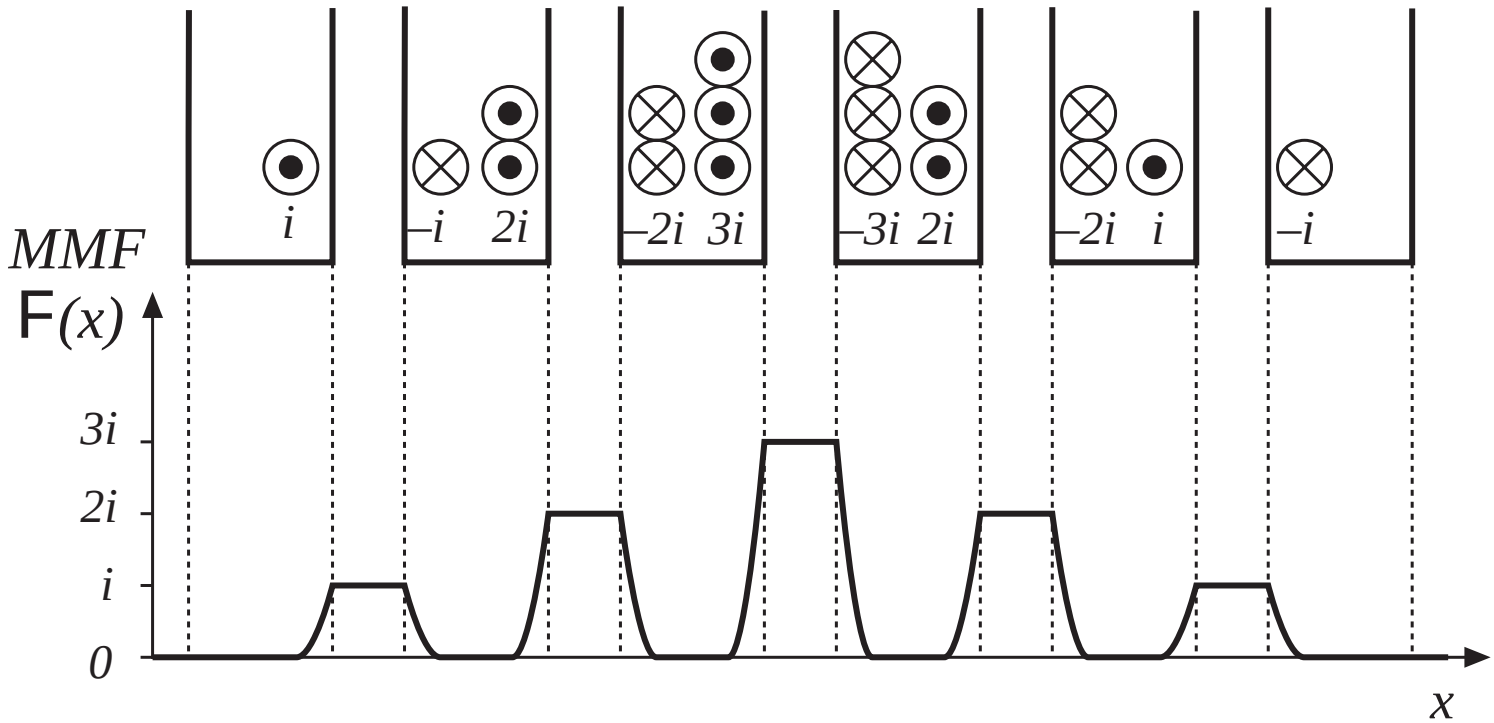

Interleaved windings

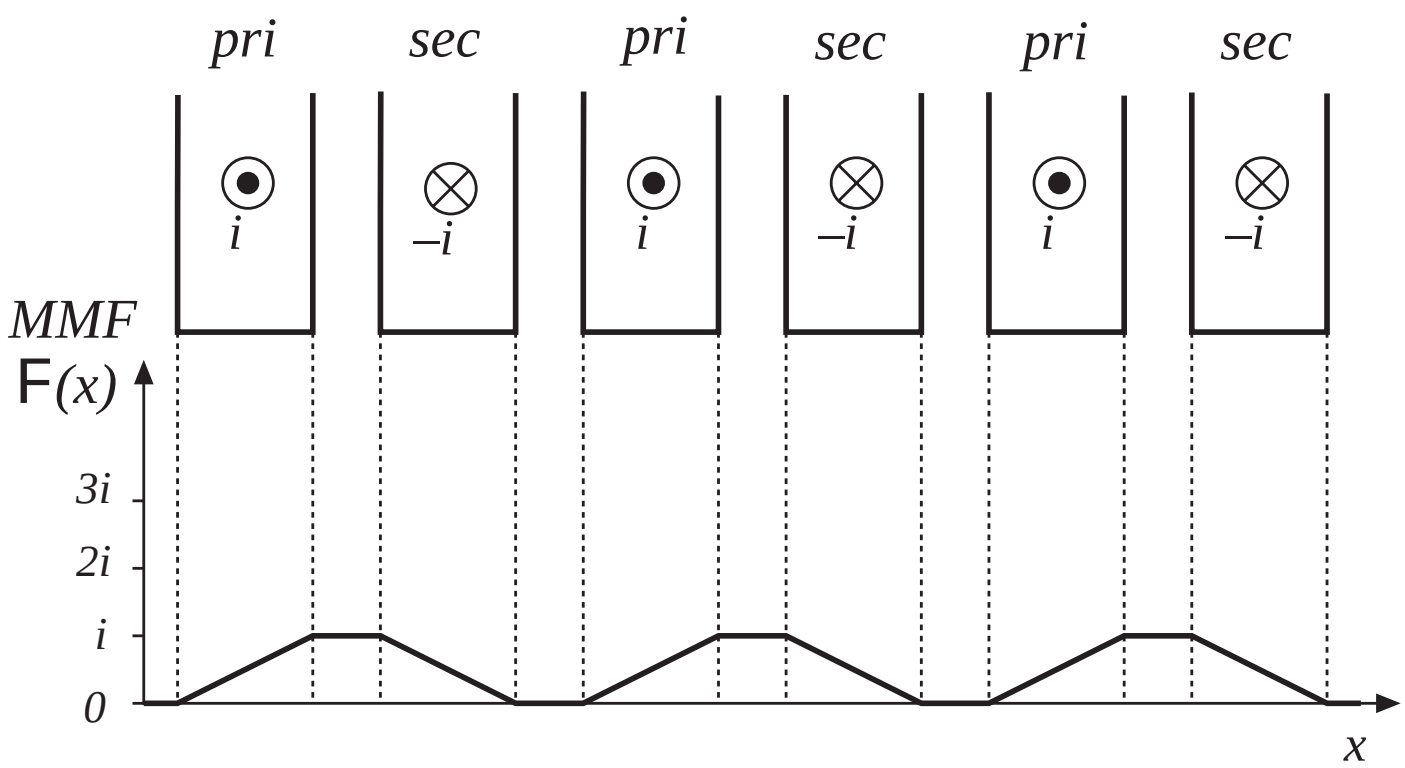

Partially-interleaved windings: fractional layers

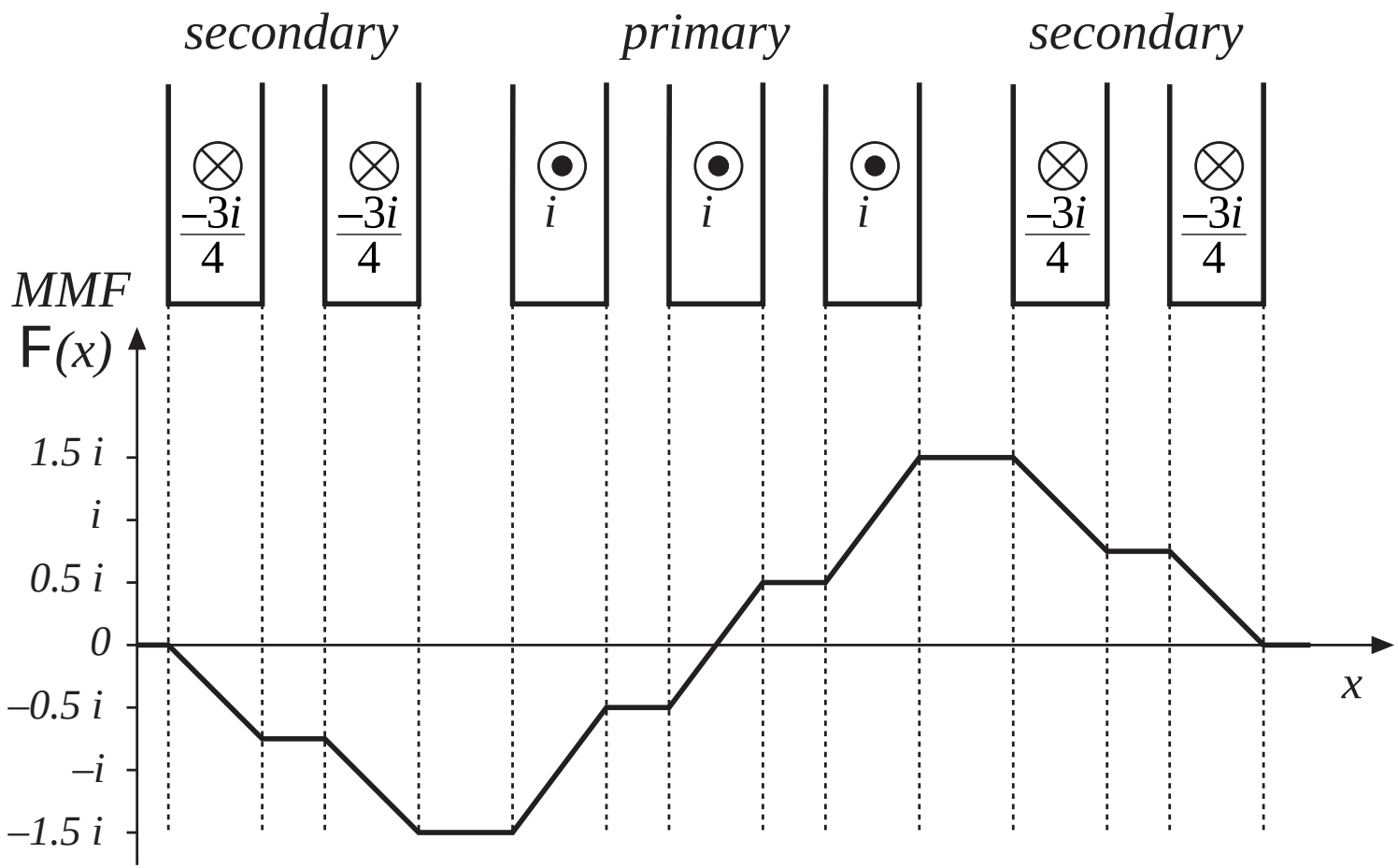

12.4.4. Power loss in a layer

Approximate computation of copper loss in one layer

Assume uniform magnetic fields at surfaces of layer, of strengths $H(0)$ and $H(d)$. Assume that these fields are parallel to layer surface (i.e., neglect fringing and assume field normal component is zero).

The magnetic fields $H(0)$ and $H(d)$ are driven by the MMFs $\mathcal{F}(0)$ and $\mathcal{F}(d)$. Sinusoidal waveforms are assumed, and rms values are used. It is assumed that $H(0)$ and $H(d)$ are in phase.

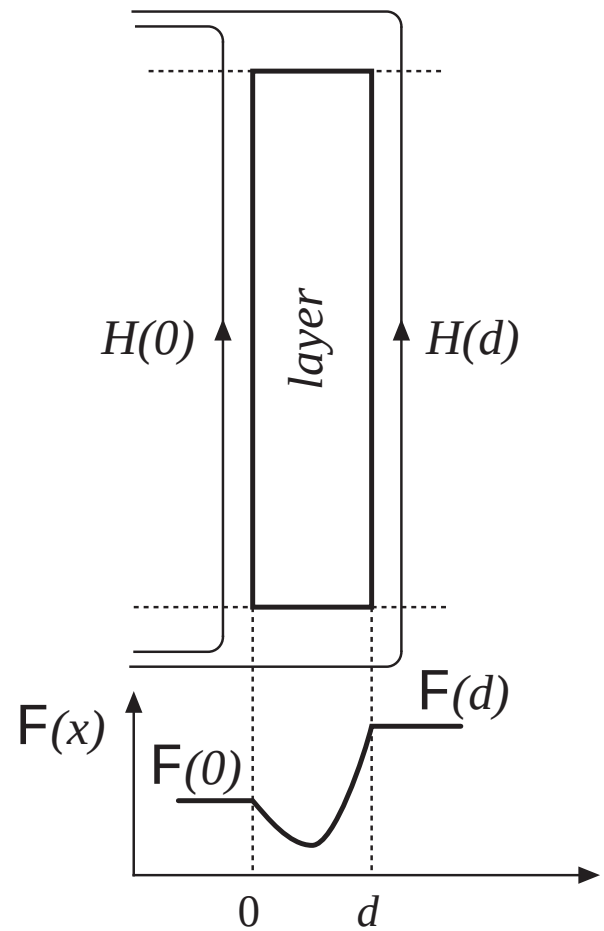

Solution for layer copper loss P

Solve Maxwell's equations to find current density distribution within layer. Then integrate to find total copper loss P in layer. Result is

$$P = R_{dc} \frac{\varphi}{n_l^2} \left[\left(\mathcal{F}^2(d) + \mathcal{F}^2(0) \right) G_1(\varphi) - 4\, \mathcal{F}(d) \mathcal{F}(0)\, G_2(\varphi) \right]$$

where

$$R_{dc} = \rho \frac{(MLT)\, n_l^2}{l_w\, \eta\, d}$$

$$G_1(\varphi) = \frac{\sinh(2\varphi) + \sin(2\varphi)}{\cosh(2\varphi) - \cos(2\varphi)}$$

$$G_2(\varphi) = \frac{\sinh(\varphi)\cos(\varphi) + \cosh(\varphi)\sin(\varphi)}{\cosh(2\varphi) - \cos(2\varphi)}$$

$$\varphi = \sqrt{\eta}\, \frac{d}{\delta} \qquad \eta = \sqrt{\frac{\pi}{4}}\, d\, \frac{n_l}{l_w}$$

n_l = number of turns in layer,
R_{dc} = dc resistance of layer,

(MLT) = mean-length-per-turn, or circumference, of layer.

Winding carrying current I, with n_l turns per layer

If winding carries current of rms magnitude I, then

$$\mathcal{F}(d) - \mathcal{F}(0) = n_l I$$

Express $\mathcal{F}(d)$ in terms of the winding current I, as

$$\mathcal{F}(d) = m\, n_l I$$

The quantity m is the ratio of the MMF $\mathcal{F}(d)$ to the layer ampere-turns $n_l I$. Then,

$$\frac{\mathcal{F}(0)}{\mathcal{F}(d)} = \frac{m-1}{m}$$

Power dissipated in the layer can now be written

$$P = I^2 R_{dc}\, \varphi\, Q'(\varphi, m)$$

$$Q'(\varphi, m) = \left(2m^2 - 2m + 1\right) G_1(\varphi) - 4m\left(m-1\right) G_2(\varphi)$$

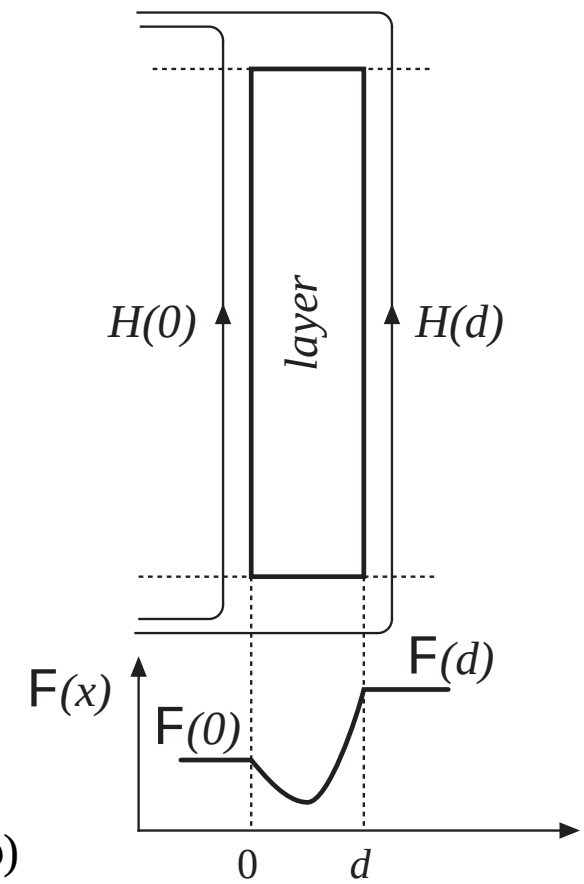

Increased copper loss in layer

$$\frac{P}{I^2 R_{dc}} = \varphi\, Q'(\varphi, m)$$

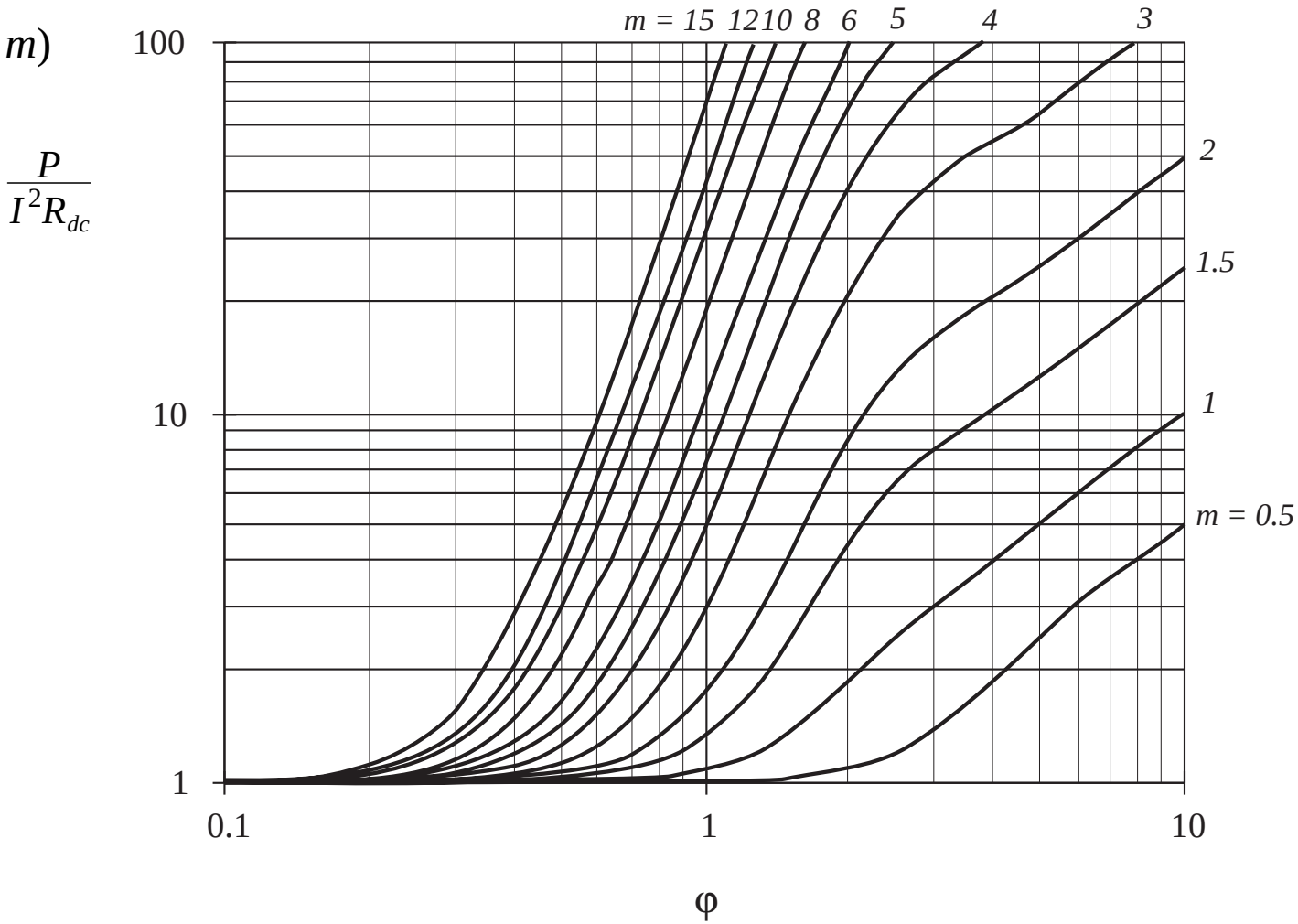

Layer copper loss vs. layer thickness

$$\frac{P}{P_{dc}\big|_{d=\delta}} = Q'(\varphi, m)$$

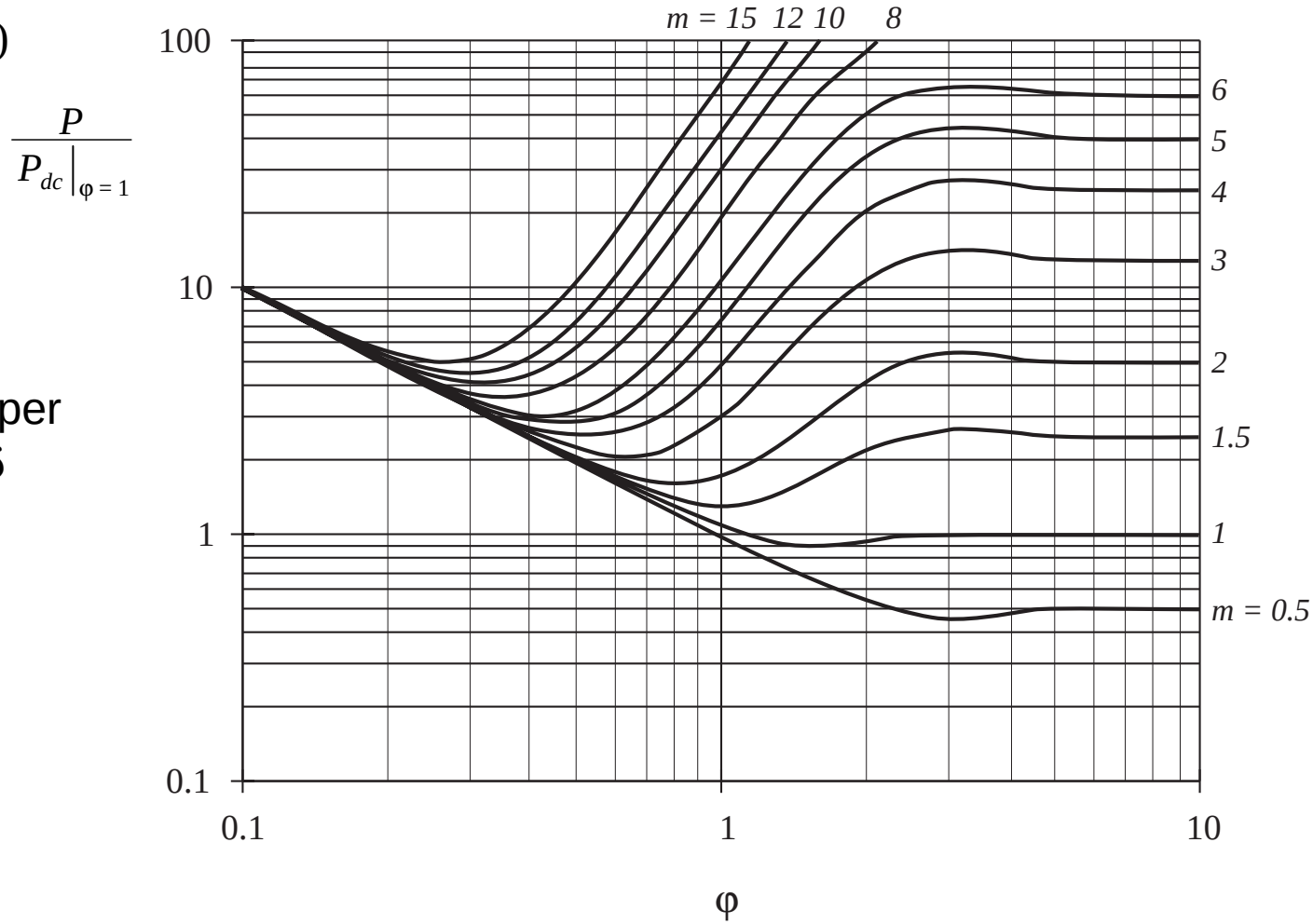

Relative to copper loss when $d = \delta$

12.4.5. Example: Power loss in a transformer winding

Two winding transformer

Each winding consists of M layers

Proximity effect increases copper loss in layer m by the factor

$$\frac{P}{I^2 R_{dc}} = \varphi\, Q'(\varphi, m)$$

Sum losses over all primary layers:

$$F_R = \frac{P_{pri}}{P_{pri,dc}} = \frac{1}{M} \sum_{m=1}^{M} \varphi\, Q'(\varphi, m)$$

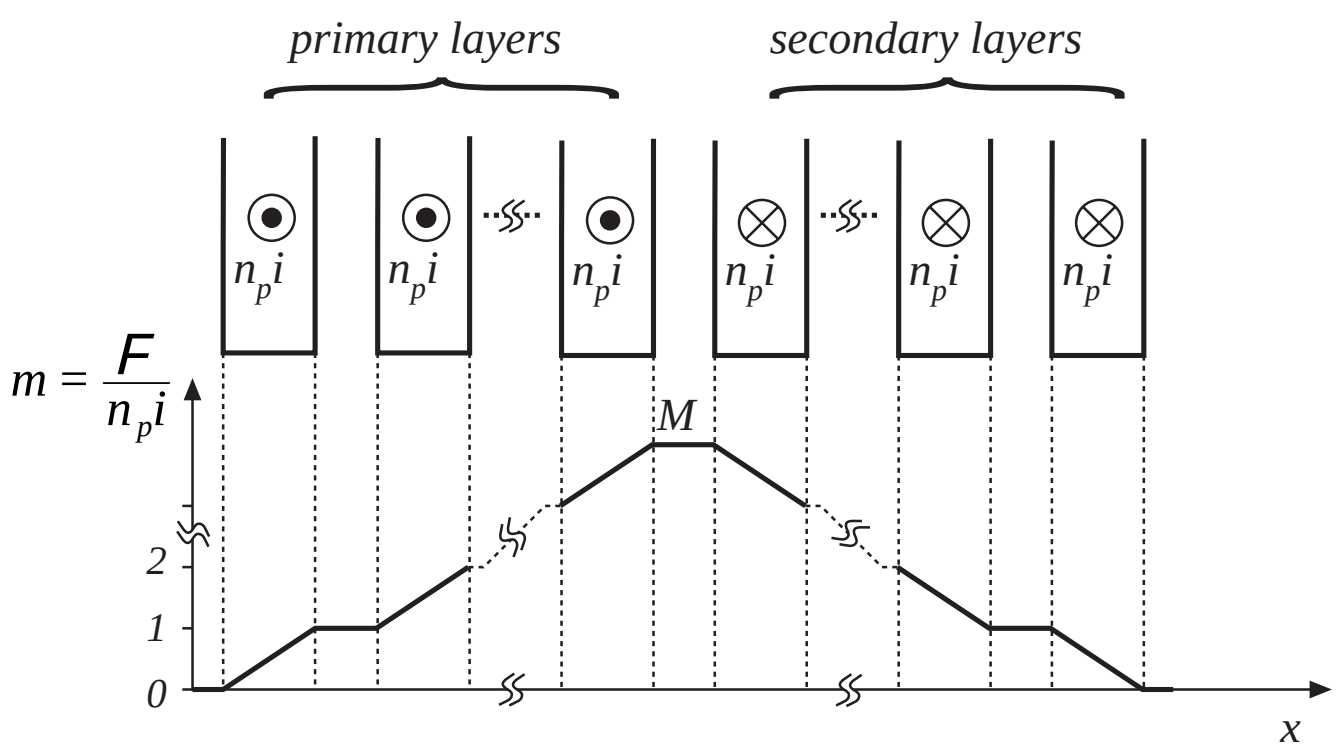

Increased total winding loss

Express summation in closed form:

$$F_R = \varphi \left[G_1(\varphi) + \frac{2}{3}\left(M^2 - 1\right)\left(G_1(\varphi) - 2G_2(\varphi)\right) \right]$$

$$F_R = \frac{P_{pri}}{P_{pri,dc}}$$

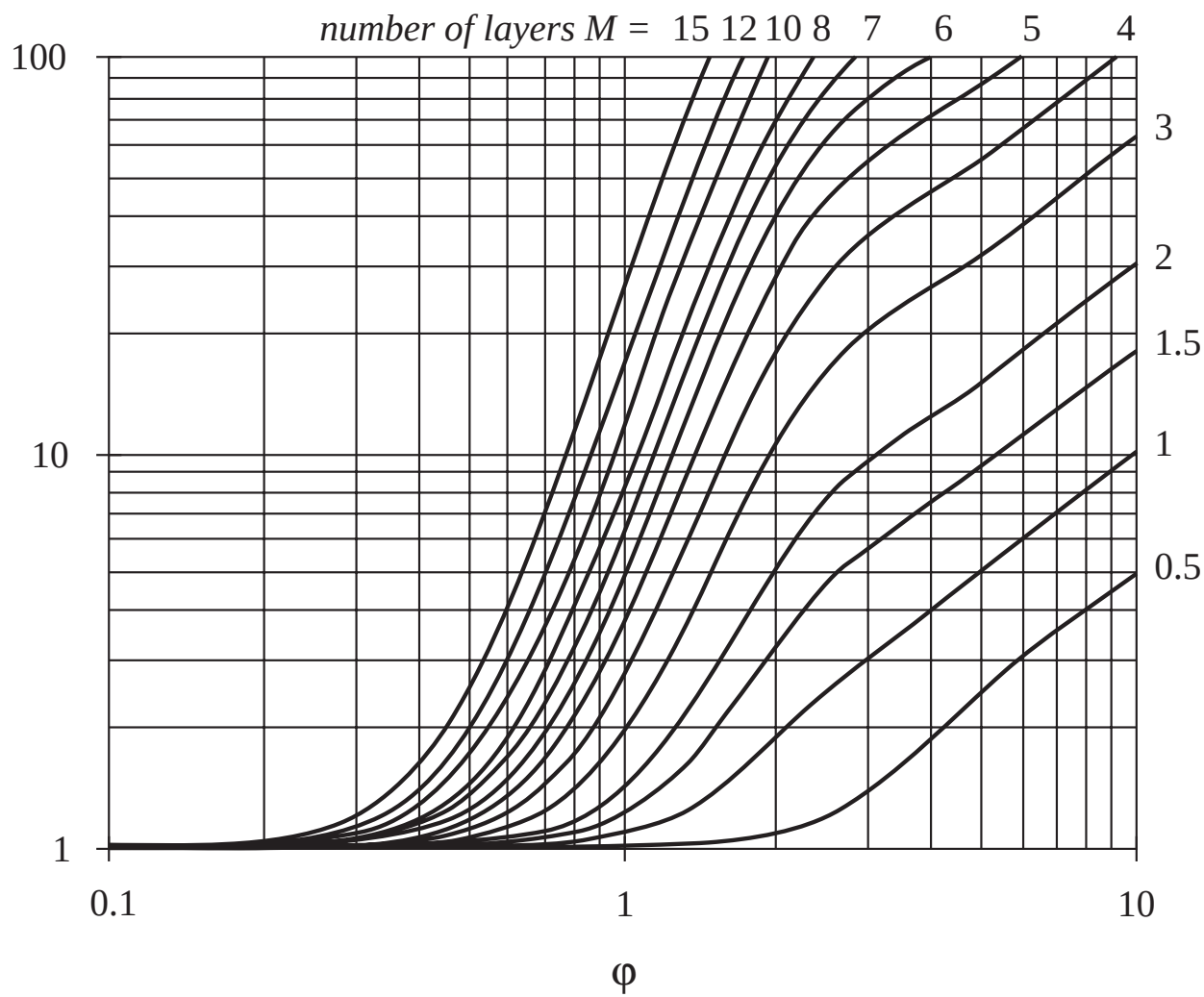

Total winding loss

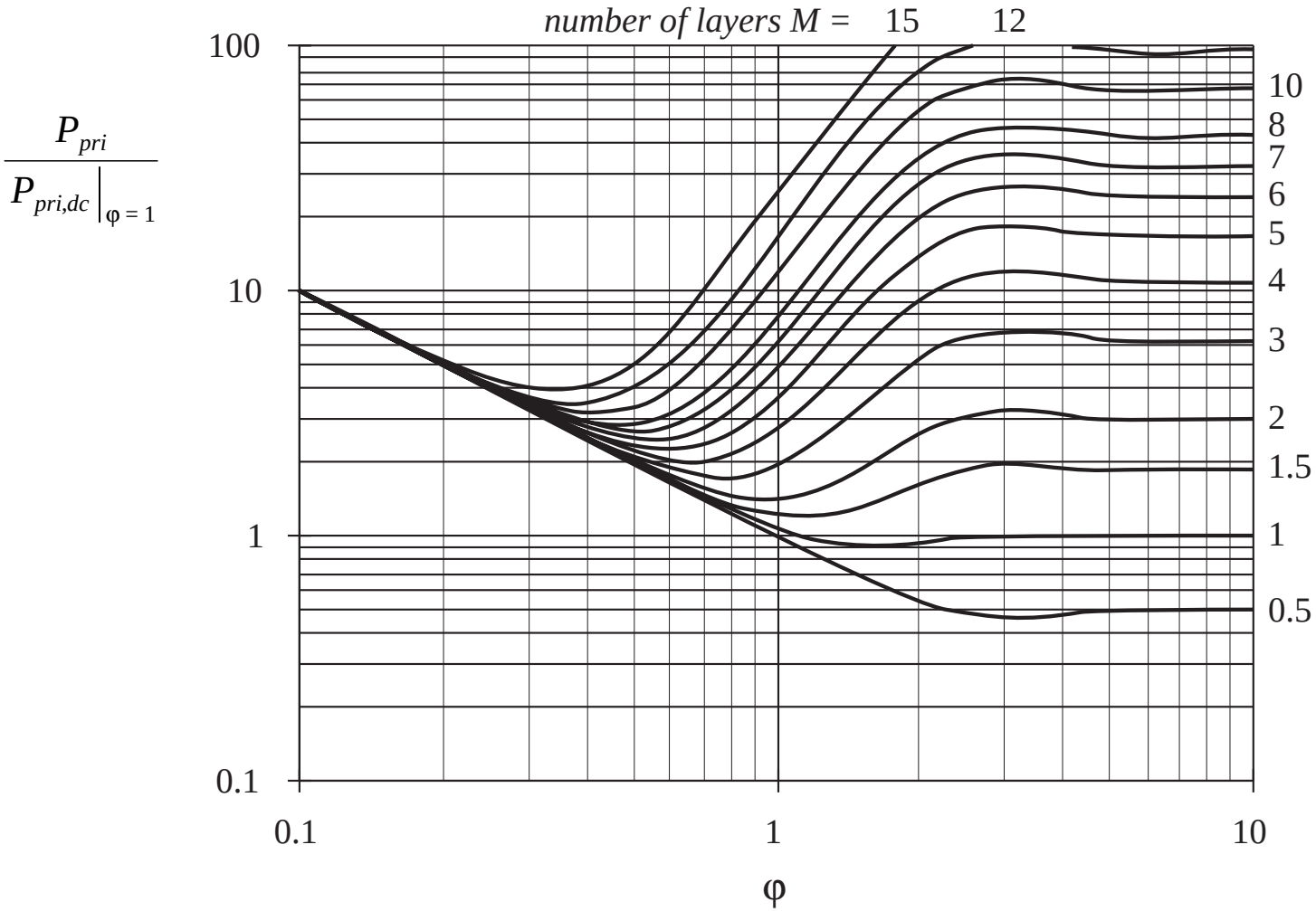

12.4.6. PWM waveform harmonics

Fourier series:

$$i(t) = I_0 + \sum_{j=1}^{\infty} \sqrt{2}\, I_j \cos(j\omega t)$$

with

$$I_j = \frac{\sqrt{2}\, I_{pk}}{j\,\pi} \sin(j\pi D) \qquad I_0 = D I_{pk}$$

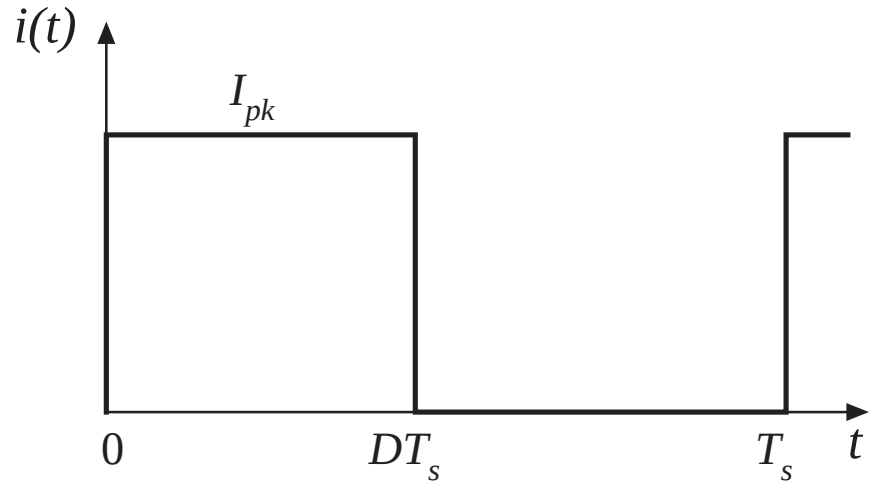

Copper loss:

Dc $\quad P_{dc} = I_0^2 R_{dc}$

Ac $\quad P_j = I_j^2 R_{dc} \sqrt{j}\, \varphi_1 \left[G_1(\sqrt{j}\, \varphi_1) + \frac{2}{3}\left(M^2 - 1\right)\left(G_1(\sqrt{j}\, \varphi_1) - 2G_2(\sqrt{j}\, \varphi_1) \right) \right]$

Total, relative to value predicted by low-frequency analysis:

$$\frac{P_{cu}}{D\, I_{pk}^2 R_{dc}} = D + \frac{2\varphi_1}{D\pi^2} \sum_{j=1}^{\infty} \frac{\sin^2(j\pi D)}{j\sqrt{j}} \left[G_1(\sqrt{j}\, \varphi_1) + \frac{2}{3}\left(M^2 - 1\right)\left(G_1(\sqrt{j}\, \varphi_1) - 2G_2(\sqrt{j}\, \varphi_1) \right) \right]$$

Harmonic loss factor F_H

Effect of harmonics: F_H = ratio of total ac copper loss to fundamental copper loss

$$F_H = \frac{\sum_{j=1}^{\infty} P_j}{P_1}$$

The total winding copper loss can then be written

$$P_{cu} = I_0^2 R_{dc} + F_H F_R I_1^2 R_{dc}$$

Increased proximity losses induced by PWM waveform harmonics: $D = 0.5$

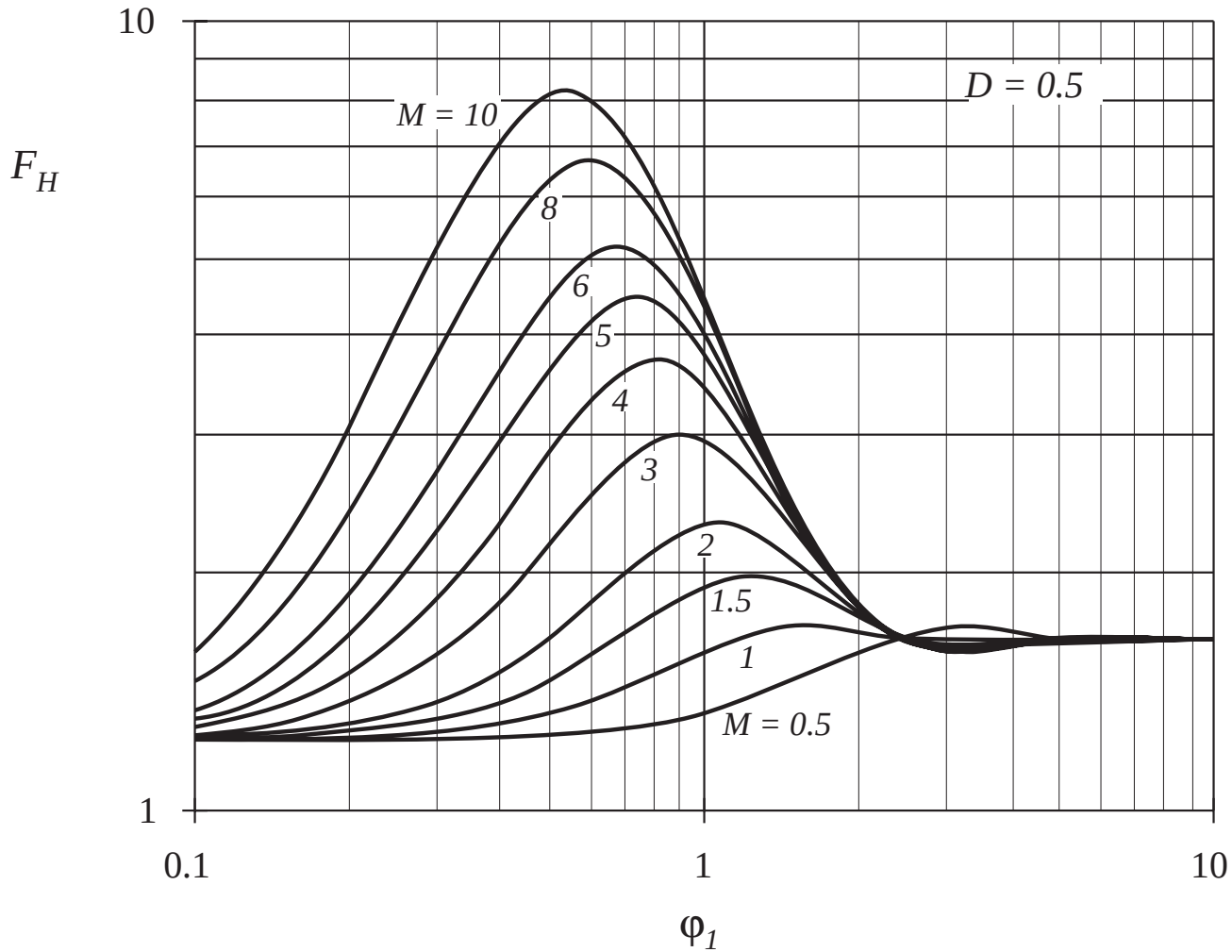

Increased proximity losses induced by PWM waveform harmonics: D = 0.3

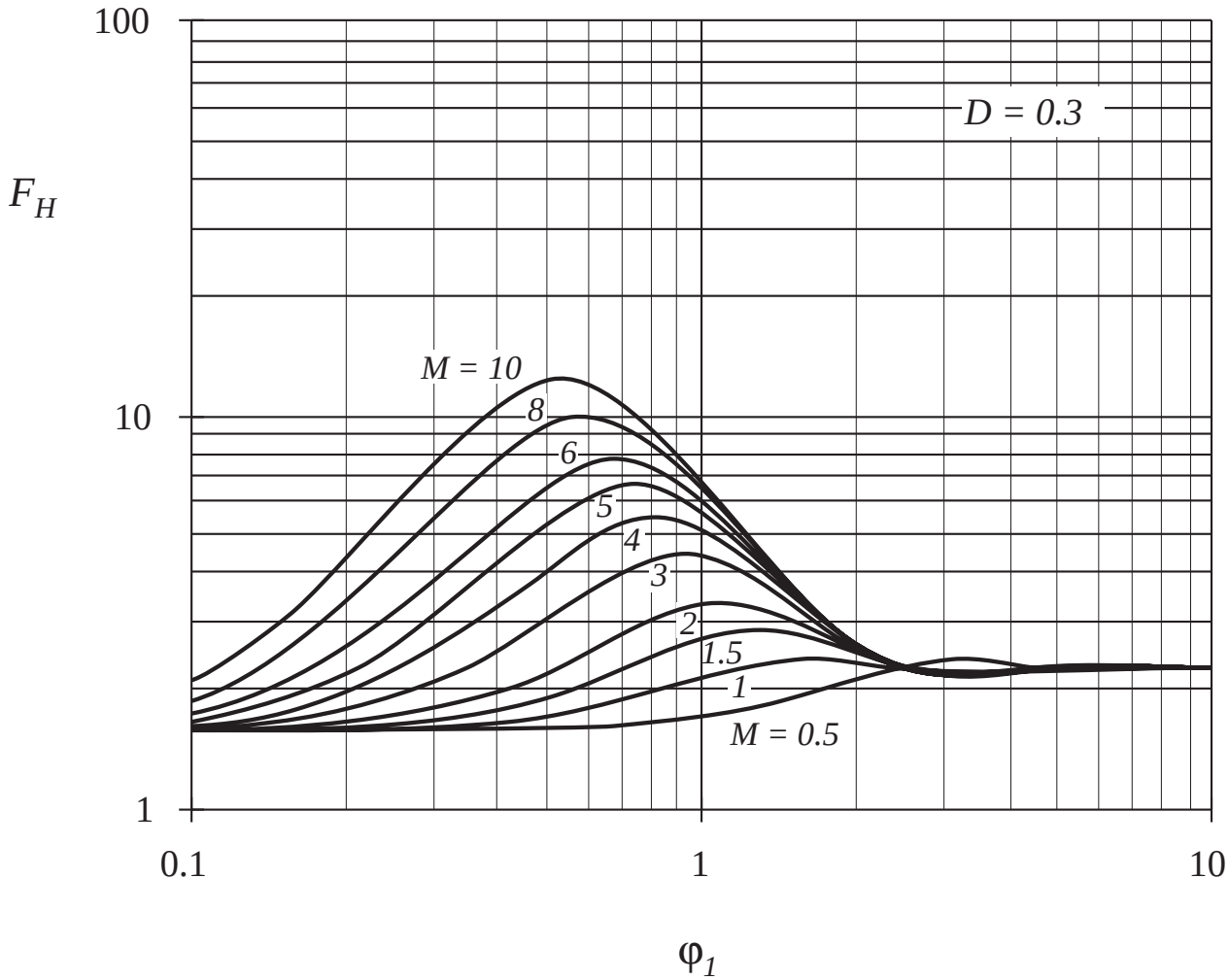

Increased proximity losses induced by PWM waveform harmonics: D = 0.1

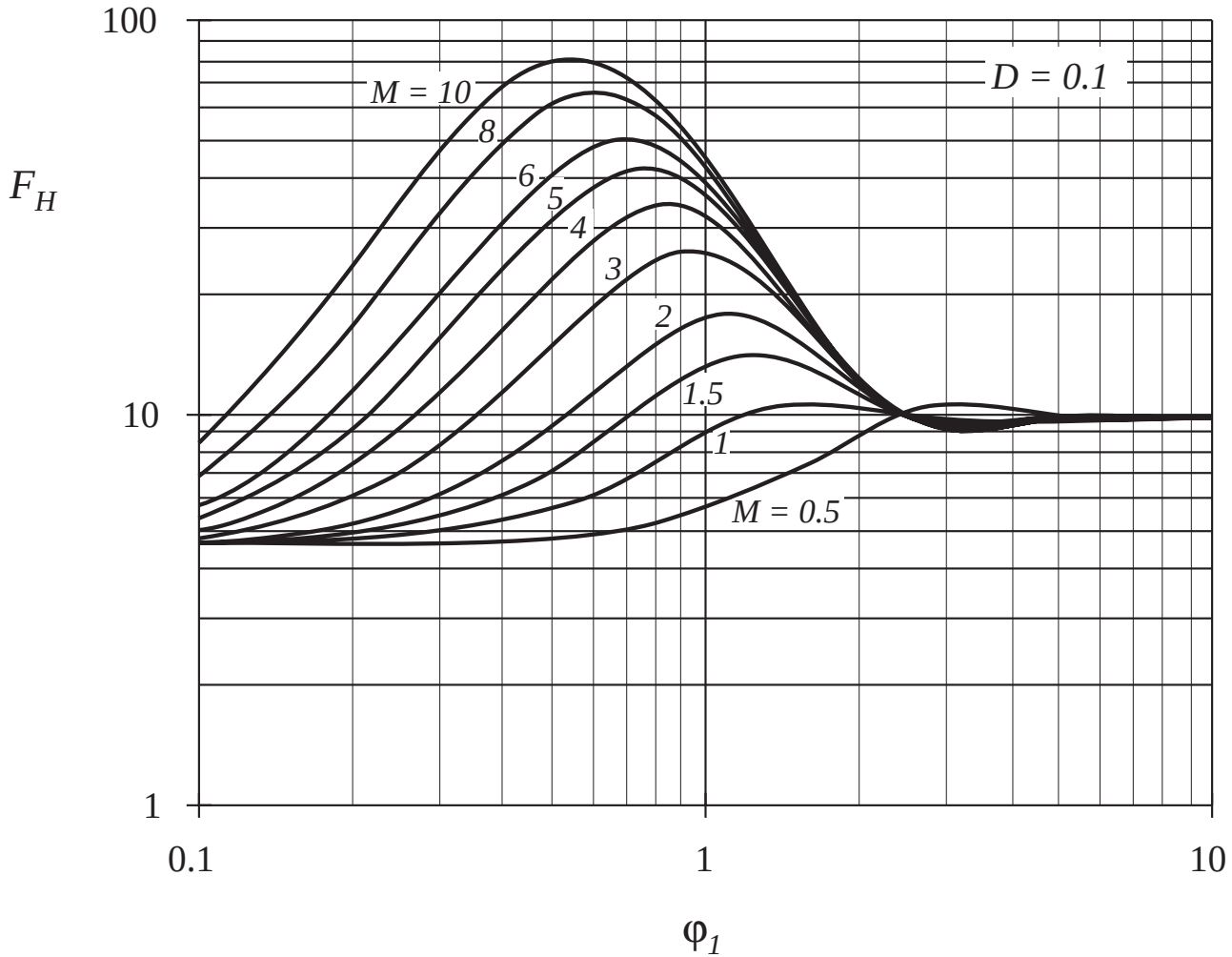

Summary of Key Points

1. Magnetic devices can be modeled using lumped-element magnetic circuits, in a manner similar to that commonly used to model electrical circuits. The magnetic analogs of electrical voltage V, current I, and resistance R, are magnetomotive force (MMF) F, flux Φ, and reluctance R respectively.
2. Faraday's law relates the voltage induced in a loop of wire to the derivative of flux passing through the interior of the loop.
3. Ampere's law relates the total MMF around a loop to the total current passing through the center of the loop. Ampere's law implies that winding currents are sources of MMF, and that when these sources are included, then the net MMF around a closed path is equal to zero.
4. Magnetic core materials exhibit hysteresis and saturation. A core material saturates when the flux density B reaches the saturation flux density B_{sat}.

Summary of key points

5. Air gaps are employed in inductors to prevent saturation when a given maximum current flows in the winding, and to stabilize the value of inductance. The inductor with air gap can be analyzed using a simple magnetic equivalent circuit, containing core and air gap reluctances and a source representing the winding MMF.

6. Conventional transformers can be modeled using sources representing the MMFs of each winding, and the core MMF. The core reluctance approaches zero in an ideal transformer. Nonzero core reluctance leads to an electrical transformer model containing a magnetizing inductance, effectively in parallel with the ideal transformer. Flux that does not link both windings, or “leakage flux,” can be modeled using series inductors.

7. The conventional transformer saturates when the applied winding volt-seconds are too large. Addition of an air gap has no effect on saturation. Saturation can be prevented by increasing the core cross-sectional area, or by increasing the number of primary turns.

Summary of key points

8. Magnetic materials exhibit core loss, due to hysteresis of the B-H loop and to induced eddy currents flowing in the core material. In available core materials, there is a tradeoff between high saturation flux density B_{sat} and high core loss P_{fe}. Laminated iron alloy cores exhibit the highest B_{sat} but also the highest P_{fe}, while ferrite cores exhibit the lowest P_{fe} but also the lowest B_{sat}. Between these two extremes are powdered iron alloy and amorphous alloy materials.

9. The skin and proximity effects lead to eddy currents in winding conductors, which increase the copper loss P_{cu} in high-current high-frequency magnetic devices. When a conductor has thickness approaching or larger than the penetration depth δ, magnetic fields in the vicinity of the conductor induce eddy currents in the conductor. According to Lenz's law, these eddy currents flow in paths that tend to oppose the applied magnetic fields.

Summary of key points

10. The magnetic field strengths in the vicinity of the winding conductors can be determined by use of MMF diagrams. These diagrams are constructed by application of Ampere's law, following the closed paths of the magnetic field lines which pass near the winding conductors. Multiple-layer noninterleaved windings can exhibit high maximum MMFs, with resulting high eddy currents and high copper loss.

11. An expression for the copper loss in a layer, as a function of the magnetic field strengths or MMFs surrounding the layer, is given in Section 12.4.4. This expression can be used in conjunction with the MMF diagram, to compute the copper loss in each layer of a winding. The results can then be summed, yielding the total winding copper loss. When the effective layer thickness is near to or greater than one skin depth, the copper losses of multiple-layer noninterleaved windings are greatly increased.

Summary of key points

12. Pulse-width-modulated winding currents of contain significant total harmonic distortion, which can lead to a further increase of copper loss. The increase in proximity loss caused by current harmonics is most pronounced in multiple-layer non-interleaved windings, with an effective layer thickness near one skin depth.